CITY OF ALBUQUERQUE
ENVIRONMENTAL HEALTH DEPARTMENT
AIR QUALITY PROGRAM

CONSTRUCTION PERMIT
MODIFICATION APPLICATION
#0953-M4-2TR

University of New Mexico Hospital (UNMH)
University of New Mexico Hospital

Prepared By:

Enrico Volpato – Executive Director Facility Services

University of New Mexico Hospitals (UNMH)
2211 Lomas Blvd. NE
Albuquerque, NM 87106
(505) 272-0021

Michael Celente – Senior Consultant

Trinity Consultants, Inc
9400 Holly Ave NE
Building 3, Suite B
Albuquerque, NM 87122
(505) 266-6611

July 2022

Project 203201.0119

Received 7/22/2022

7/25/2022

Trinity Consultants

Trinity Consultants
9400 Holly Ave NE, Bldg 3, Ste 300, Albuquerque, NM 87122 / P 505.266.6611 / **trinityconsultants.com**

July 22, 2022

Carina G. Munoz-Dyer
Environmental Health Supervisor, Permitting Division
Air Quality Program, Environmental Health Department
City of Albuquerque
PO Box 1293
Albuquerque, NM 87103
(505) 768-1948
cmunoz-dyer@cabq.gov

RE: Air Quality Construction Permit Application to Modify #0953-M4-2TR

BACKGROUND

Dear Ms. Munoz-Dyer,

On January 28, 2022, University of New Mexico Hospital (UNMH) submitted a permit modification application to the City of Albuquerque (CABQ) Environmental Health Department (EHD) Air Quality Program (AQP) for its facility located at 2211 Lomas Blvd NE in Albuquerque, NM. The AQP completed an initial review of the application and ruled the application incomplete on March 4, 2022. The AQP provided a list of deficiencies and/or questions related to the application submittal. On March 14, 2022 UNMH had a virtual meeting with the EHD to address the department's questions and concerns and a path forward was determined.

UNMH submitted an updated application to the EHD on April 14, 2022. On June 6, 2022, UNMH received an email from the EHD noting that updated modeling files were required to continue with the permitting process. On June 13, 2022, UNMH requested to officially withdraw the second submittal (letter included as an attachment) and asked to have a meeting with the EHD to discuss the air dispersion modeling and develop a path forward. The section below addresses the items discussed during that meeting (held on June 24, 2022) and provides responses to questions regarding the air dispersion modeling.

RESPONSES TO QUESTIONS AND DEFICIENCIES

The following questions/deficiencies were based upon the EHD's review of the modeling files submitted with the application. ***Responses to the questions are included in blue italicized font.***

1. First the program determined that, based on the Program's technical expertise, the modeling shows that even at the lowest reasonably defensible estimates, the proposed Facility's emissions will exceed the one-hour nitrogen dioxide (NO_2) standard. The modeling files also inaccurately included the two existing boilers at the existing CUP.

These exceedances were recorded at receptors added in by the EHD as part of their technical review. Additional receptors were added at these locations as part of the updated modeling

submitted with this application. Please note that the following changes are proposed as part of this modification to ensure compliance with applicable NAAQS and NMAAQS.

- ***Replacement of existing BLR-1A with a new Hurst Boiler. This is the same unit that is replacing BLR-2A. All emissions and modeling parameters for these two units are identical.***
- ***Previously, the AP-42 emission factor for NO_X was utilized for BLR-3B. However, UNMH reached out to the manufacturer, who provided an updated guarantee noting that the unit was manufactured to attain a NO_X emission rate of 30 ppm. The calculations have been updated accordingly and supporting information is included in this application.***

As a conservative measure, all sources of emissions (new or modified) were included in the Significant Impact Level (SIL) modeling to generate significant receptors which were used in the Cumulative Impacts Analysis (CIA). A MAXDCONT analysis was completed for 1-HR NO_2 which shows that the facility does not contribute to any exceedances.

2. Second, the modeling files incorrectly identified the fence line around the existing CUP (specifically, along the west restricted boundary of the site).

An updated fence line was used in the modeling submitted with this application. Figure 1 shows the area with restricted access (in green) which was used as the fence line. This image was reviewed during the meeting with the EHD on June 24, 2022. UNMH precludes public access from all areas within the green boundary.

Figure 1: Boundary Receptors Outline / Fence Line

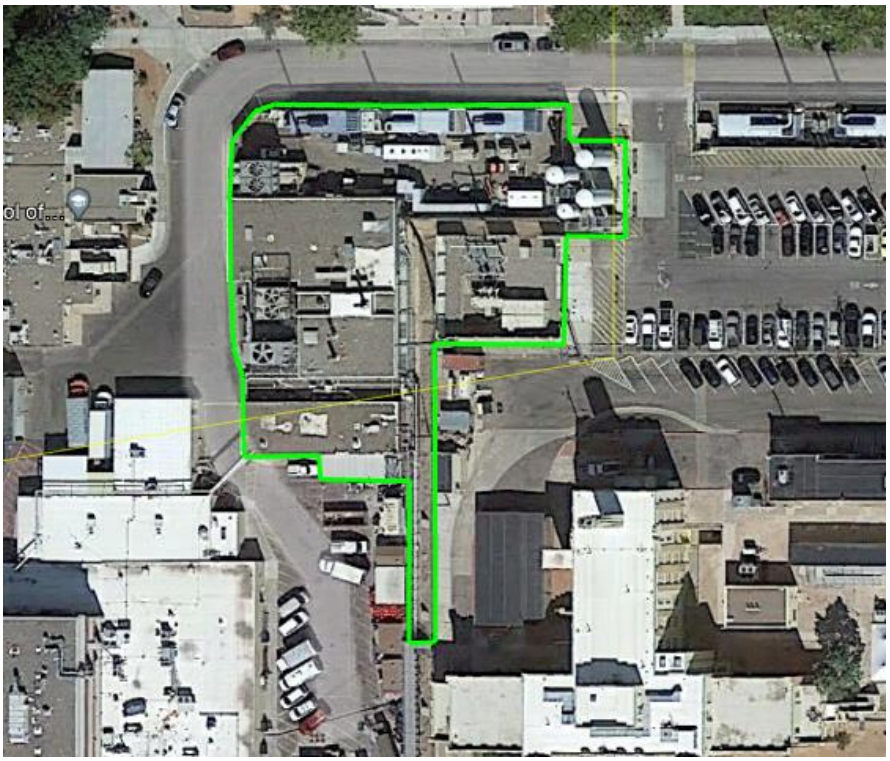

3. Third, the modeling files incorrectly placed the fence line receptors inside the restricted area (along the north and east side of the existing CUP rather than in ambient air (along the west and south sides of the existing CUP).

This has been addressed in the updated modeling. Please refer to #2 above for the updated fence line. Please note that the CUP building included in the modeling was modified to more accurately reflect the perimeter and updated fence line.

UNM HOSPITALS

June 13, 2022

Carina G. Munoz-Dyer
Environmental Health Supervisor, Permitting Division
Air Quality Program, Environmental Health Department
City of Albuquerque

Subject: UNM Hospital Air Quality Construction Permit Application Withdrawal Permit Application: 0953-M4-2TR

Dear Ms. Munoz-Dyer,

Thank you for your prompt confirmation of our request to withdraw our Emergency Permit request submitted as Application 0953-M5-EP. Based on your email reply dated June 6, 2022 (attached) we understand that the City of Albuquerque Environmental Health Department (EHD) is providing the University of New Mexico Hospital (UNMH) the opportunity to withdraw our second submittal of permit modification 0953-M4-2TR before formal adjudication based on the review of the Emergency Permit Application. This is most appreciated and represents a meaningful gesture in response to our request for a productive and collegial working relationship going forward.

Accordingly, UNMH respectfully requests to withdraw the second application to modify permit 0953-M4-2TR and is intending to resubmit the application with applicable updates based on new air dispersion modeling.

Prior to the resubmittal, UNMH would like to request a meeting with the AQP to discuss the previously identified list of deficiencies as noted by the EHD in their denial of the emergency permit application dated May 25, 2022. As the same modeling was submitted for both the emergency permit application and construction permit modification application, UNMH understands that the deficiencies listed in the *Operation in Accordance with Applicable Standards, Emission Limitations and Conditions section* (attached) must be addressed prior to resubmittal.

The purpose of this meeting is to ensure that UNMH is submitting an application and air dispersion modeling that demonstrates compliance with the National and New Mexico Ambient Air Quality Standards (NAAQS and NMAAQS) and meets department expectations. Trinity Consultants, on behalf of UNMH, will be coordinating with the EHD to set up this meeting.

UNMH remains committed to ensuring continued compliance with all applicable regulations and appreciates the continued partnership with the department.

Sincerely,

M. Chi

Michael Chicarelli DNP, RN
Chief Operating Officer, UNM Hospital

Attachment: Email from Ms. Carina G. Munoz-Dyer dated June 9, 2022

Mike Celente

From: Munoz-Dyer, Carina G. <cmunoz-dyer@cabq.gov>
Sent: Monday, June 6, 2022 12:39 PM
To: Michael J Chicarelli
Cc: Enrico D Volpato; sniskanen@broaddususa.com; Mike Celente; Martinez, Angel; Sona, Kelsea; Stonesifer, Jeff W.; Douglas J Brooks
Subject: RE: 0953-M5-EP UNMH letter 05252022

Good afternoon Mr. Chicarelli,

On May 27, 2022, the Air Quality Program ("Program") we received the email with a letter requesting to withdraw the emergency permit application, and we will move forward with the withdrawal.

Regarding the application to modify permit application 0953-M4-2TR. The Program received the first submittal to modify this application on January 28, 2022, and it was deemed incomplete on February 28, 2022. The Program received the second submittal on April 14, 2022. However, the second submittal included the same modeling files that were included in the emergency permit application. As explained in the Environmental Health Department ("EHD") Second Submittal Review Determination Letter for the emergency permit application dated May 25, 2022, section ***Operation in Accordance with Applicable Standards, Emission Limitations and Conditions***, the Program determined that the modeling included in the emergency permit application had a few deficiencies, and as a result, the emergency permit application was deemed incomplete.

In order for the Program to continue the process, UNMH needs to:

1. Withdraw the second application submittal to modify permit 0953-M4-2TR received April 14, 2022; and
2. Resubmit the application with updated modeling files. If applicable, make any changes to the application as a result of the modeling files.

The Program is aware the importance of UNMH's project expansion and we will continue the process to the best of our ability once we receive a complete application.

Let me know if you have any questions.

Respectfully,
Carina

CARINA G. MUNOZ-DYER
environmental health supervisor | environmental health department

TABLE OF CONTENTS

1. GENERAL INFORMATION **1-1**
1.0 Executive Summary **1-1**

2. DESCRIPTION OF FACILITY AND EMISSIONS INFORMATION **2-1**
2.1 Description of the Facility **2-1**
2.2 Process Flow Sheets **2-3**
2.3 Air Pollutant Emissions and Calculation Methodology **2-4**
2.4 Emission Calculations **2-7**
2.4.1 Boiler SO_2 Emissions from Natural Gas Combustion (Example for BLR-3A through BLR-6A) 2-7
2.4.2 Boiler SO_2 Emissions from Diesel Combustion (Example for BLR-3A through BLR-6A)..... 2-7
2.4.3 Conversion of ppm to lb/MMscf for NO_X..... 2-8
2.5 Supporting Information **2-9**

3. OPERATIONAL PLAN – AIR EMISSIONS DURING SSM **3-1**
3.1 Emergency Generator Operational Plan **3-1**
3.1.1 Emergency Generator Startup Procedure..... 3-1
3.1.2 Emergency Generator Shutdown Procedure..... 3-1
3.1.3 Emergency Generator Maintenance..... 3-1
3.2 Boiler and Cooling Tower Operational Plans **3-2**

4. AIR DISPERSION MODELING ANALYSIS **4-1**

APPENDIX A. APPLICATION FORMS **A-1**

APPENDIX B. PRE-PERMIT APPLICATION MEETING **B-1**

APPENDIX C. NOTICE OF INTENT TO CONSTRUCT **C-1**

APPENDIX D. FACILITY LOCATION AND AERIAL PHOTOGRAPH **D-1**

APPENDIX E. ZONING REQUIREMENTS **E-1**

1. GENERAL INFORMATION

1.0 Executive Summary

This application proposes a modification to Construction Permit #0953-M4-2TR for University of New Mexico Hospital's facility located at 2211 Lomas Blvd. NE in Albuquerque, NM. The first application was submitted to the EHD on January 28, 2022 and was ruled administratively incomplete on March 4, 2022. A second application was submitted to the EHD on April 14, 2022. Due to modeling discrepancies identified in the emergency permit submittal, UNMH elected to withdraw the submittal on June 13, 2022. This resubmittal addresses questions and deficiencies as noted in previous incomplete determinations and discussions with the department.

As part of this modification, UNMH proposes to construct a new hospital tower with a central utility plant (CUP) to support the new tower. A new parking structure will also be erected as part of this modification although it will not contain any sources of emissions. As part of the CUP, UNMH proposes to permit four (4) additional boilers, four (4) diesel-fired back-up generators and three (3) cooling towers. All of these sources of emissions will be located in a central utility plant which will be located adjacent to a proposed parking structure. In addition, there are three (3) existing cooling towers associated with current hospital operations which will be added to this permit. Finally, existing boilers (BLR-1A and BLR-2A) are being replaced by larger units rated at 23.43 MMBtu/hr – stack parameters are being modified for these units as part of the modification. Stack parameters and calculations are being updated for BLR-1A, BLR-2A, and BLR-3B based on the most recent operational and manufacturer data available from UNMH including updates to stack heights, temperatures, diameters, and exit velocities. These new values have been confirmed by operations and are the most representative of these existing units. Additional details are provided in the modeling report (Section 4) and calculation description (Section 2.3).

Based on recent operational needs and emergency power support requirements, in addition to the construction and commissioning of the new CUP units, UNMH is also requesting the addition of one (1) more additional emergency generator (UNMH-EG-10A) as part of this resubmittal which will be located next to the BBRP Facility. Although this emergency unit is not associated directly with CUP operations, it will be pivotal in supporting hospital operations including telecommunications when the New Hospital Tower is constructed.

As such, the proposed modifications include the following updates to the existing permit:

- Addition of four (4) dual-fired boilers rated at 6.0 MMBtu/hr (Units UNMH-BLR-3A through UNMH-BLR-6A);
- Addition of four (4) diesel-fired back-up generators rated at 2,922 hp (Units UNMH-EG-6A through UNMH-EG-9A);
- Addition of one (1) diesel-fired back-up generator rated at 324 hp (UNMH-EG-10A);
- Addition of three (3) cooling towers associated with the CUP rated at 6,723 gpm (Units CT-1 through CT-3);
- Addition of three (3) cooling towers associated with existing hospital operations rated at 2,400 gpm (Unit CT-4 through CT-6); and
- Replacement of existing BLR-1A and BLR-2A (rated at 17.04 MMBtu/hr) with new Hurst Boilers at a higher capacity (23.43 MMBtu/hr)
- Updates to emissions (specifically NO_X and HAP) for BLR-3B
- Updates to stack parameters and calculations for units BLR-1A, BLR-2A and BLR-3B including stack height increases for BLR-1A and BLR-2A.

Since this is an application for a permit modification, updated air dispersion modeling has been completed and is included in this submittal which addresses concerns from the department received as part of the first incomplete determination. The included modeling report (Section 4) details AERMOD inputs and modeled concentrations associated with the proposed modifications. The report also demonstrates compliance with all applicable National and New Mexico Ambient Air Quality Standards (NAAQS and NMAAQS).

The uncontrolled and controlled emissions associated with the proposed modifications are included in the department's application forms.

2. DESCRIPTION OF FACILITY AND EMISSIONS INFORMATION

The following section summarizes the sources of emissions, process description, methodology, and emission factors used to estimate air pollutant emissions from the facility.

2.1 Description of the Facility

The existing boilers (BLR-1A, BLR-2A and BLR-3B) support current hospital operations by providing steam used for heating, hot water, and sterilization of lab and surgical equipment. The replacement boilers (BLR-1a and BLR-2A) will serve the same purpose as the existing units. The new CUP boilers (BLR-3A through BLR-6A) will be used specifically for Heating, Ventilation and Air Conditioning (HVAC) heating (e.g. hydronic) hot water. A separate electric clean steam boiler (not a source of emissions) will be installed and utilized for laundry, domestic hot water, or sterilization.

The new CUP boilers will operate under a N+1 redundancy system. In other words, up to 3 boilers will be operational continuously and the fourth boiler will act as a backup in case a boiler or component fails. If one of the three boilers were to suddenly fail, the fourth would be started up right away such that service would not be interrupted. The boilers will all be connected to the same network to provide steam to support the same hospital operations as mentioned above for the new hospital tower. Note that operations could dictate operation of less than 3 boilers if not all units are required to meet the demand.

Based on the N+1 redundancy system, air dispersion modeling for this facility was completed assuming that only 3 CUP boilers were operated simultaneously (in addition to the existing units). A screening model was completed to determine which combination of the boilers would result in the highest modeled concentrations. The results show that emissions from Boilers 3A through 5A resulted in the highest modeled concentration and therefore, those units were modeled in both the significance analysis and cumulative impact analysis (CIA).

Just as the existing emergency generators (EG-1A through EG-5A) provide backup power in the case of an emergency, the new generators proposed with the CUP (EG-6A through EG-9A) will provide power to the new hospital tower in the event that primary power is interrupted. The proposed BBRP generator (EG-10A) will provide similar backup requirements although it will not be located at the CUP. This unit will support power and telecommunications needs and will be pivotal during after the construction and commissioning of the New Hospital Tower. There are comparatively minor actual emissions from the infrequent and intermittent emergency backup operations inherent to a hospital. Even so, public hospitals, especially Level 1 Trauma Centers, must have robust emergency backup capabilities on standby.

The emergency backup operations at UNMH include the infrequent and intermittent emergency backup generator operations and the very infrequent intermittent operation of the boilers on backup diesel fuel. As mentioned during pre-application meetings with the EHD, the boilers (both new and existing) will only fire diesel fuel in emergency situations when firing of natural gas is not possible. Burning diesel backup fuel in the boilers at UNMH (even to prepare for emergencies) has not occurred for several years. As interlocks will be installed on the boilers to ensure they do not fire diesel fuel except in emergency situations, the emissions used in the air dispersion modeling will be based on the combustion of natural gas.

Outside of the rare PNM electricity outages, UNMH only operates their emergency generators as much as The Joint Commission requires them to in order for UNMH to maintain their Centers for Medicare & Medicaid Services (CMS) Accreditation. The Joint Commission generator reliability operating requirements include operating the generators weekly under no load for roughly 45 minutes and a

monthly 30% test load for about an hour. These requirements do not apply to UNMH-EG-10A as it only operates during the unavoidable loss of commercial power.

To comply with 40 CFR 60 Subpart IIII [New Source Performance Standards (NSPS) for Compression Ignition Stationary Reciprocating Internal Combustion Engines (RICE)] requirements, UNMH generators 4A and 5A are already restricted to less than 100 hours of non-emergency operations annually. As the new generators (6A through 10A) will also be subject to NSPS IIII, their non-emergency hours of operation will also be limited to 100 hours.

In accordance with the AQP's "Air Dispersion Modeling Guidelines for Air Quality Permitting (October 2019)", emergency generators with backup PNM power than operate less than 500 hours per year are exempt from air dispersion modeling requirements. As such, the only sources included in the air dispersion modeling are the boilers and cooling towers.

Additionally, as part of this modification, UNMH proposes the installation of three (3) new cooling towers associated with the CUP as well as the permitting of three (3) existing cooling towers associated with current hospital operations. The towers will be used to reject heat from condenser water and other hospital processes. The process water flows directly over the heat transfer surface of the cooling tower and a fraction of this water is evaporated when air is introduced to the system. This evaporative process cools the remaining water. However, the air flowing through the tower can entrain water droplets and carry them out of the tower in a process referred to as drift. Section 2.3 goes into more detail regarding particulate matter emissions associated with the cooling towers.

2.2 Process Flow Sheets

N/A – There is no specific process for this facility as the only sources at this facility are generators, boilers, and cooling towers. As discussed in Section 2.1, the generators provide power in the event of a PNM outage, the boilers provide steam to support hospital operations and the cooling towers are used to cool process water. As such, a process flow diagram (PFD) is not included in this Permit Modification application.

2.3 Air Pollutant Emissions and Calculation Methodology

2.3.1 Existing Units - Description of Calculations and Emission Factors

2.3.1.1 Boilers (Units UNMH-BLR-1A, UNMH-BLR-2A and UNMH-BLR-3B)

Emissions from the existing boilers during normal operation are associated with the combustion of natural gas. CO, and VOC emissions are based on AP-42 Table 1.4-1 & 1.4-2 for external combustion sources for units BLR-1A, BLR-2A and BLR-3B. For these units, NO_X emissions are based on a manufacturer guarantee of 30 ppm @ 3% O_2 for each of the boilers. The background guidance document for AP-42 Section 1.4 includes an equation to convert ppm concentrations to lb/MMScf emission factors. This 30 ppm concentration was converted to lb/MMScf and rounded up to account for any potential variability. A footnote describing this calculation in more detail is included in the example calculations.

Studies have shown that standard AP-42 emission factors are over-predictive for particulate matter emissions from pipeline quality natural gas combustion. As such, PM emissions are based on a peer-reviewed study from Zephyr Environmental Corporation (Zephyr) entitled "PM Emission Factors: Past, Present and Future (2014)". Actual emissions were collected and measured using data from New York State Energy Research and Development Authority (NYSERDA) and the American Petroleum Institute (API) using EPA standard test methods for natural gas combustion. These emission factors are more reflective of actual PM emissions associated with natural gas combustion and were approved by the department in the most recent technical revision submittal (August 2019). UNMH proposes to continue using these emission factors as part of this permit modification. Please note that a 50% safety factor was used in the original technical revision application and is proposed to still be included in this application.

SO_2 emissions are based on the natural gas specification of 5 gr S/100 scf. This value was used to calculate SO_2 emissions based on a fuel usage (flowrate in scf/hr) and the stoichiometric ratio associated with 100% conversion of sulfur to sulfur dioxide. HAP emissions for the boilers are based exclusively on AP-42 Section 1.4, Table 1.4-3. Hourly emissions are multiplied by 8,760 hr/yr (continuous operation) and converted from pounds to tons (2,000 lb = 1 ton).

2.3.1.2 Boilers Diesel Back-up (Units UNMH-BLR-1A, UNMH-BLR-2A and UNMH-BLR-3B)

Emissions from the existing boilers (during emergency situations when natural gas combustion is not possible) are associated with the combustion of diesel fuel. NO_x, SO_2, VOC, CO, PM, and HAPs emission factors are taken from AP-42 Table 1.3-1, 1.3-2, or 1.3-9 for external combustion sources.

The fuel heat value of 140 MBtu/gal was taken from AP-42 Section 1.3 and was utilized in conjunction with the heat rate of the boilers (MMBtu/hr) to calculate the fuel usage (gal/hr) and hourly emissions (lb/hr). Ton per year (tpy) emissions are based on lb/Mgal emission factors from AP-42 and historical operational records for annual fuel usage (Mgal/yr) for each of the units.

2.3.1.3 Back-up Diesel Generators (Units UNMH-EG-1A through UNMH-EG-5A)

Emissions from the existing generators are a result of the combustion of diesel fuel. NO_x, VOC, CO, and PM combustion emissions are based on NSPS Nonroad Tier 2 limits for internal

combustion engines for units EG-2A, 3A, 4A and 5A. NO_X and CO emissions for unit EG-1A are based on stack testing data plus a 20% safety factor, while VOC and PM emissions are based on AP-42 Section 3.4, Table 3.4-1. SO_2 emissions for the generators are based on the AP-42 Table 3.4-1 emission factor for SO_2 and the assumption that all units fire ultra-low sulfur diesel (ULSD) with a maximum allowable sulfur content of 15 ppm. HAPs are based on AP-42 Table 3.4-3. These are backup units and are limited to 500 hours of operation annually. As such lb/hr emissions for all pollutants are multiplied by 500 hr/yr and converted to tons (1 ton = 2,000 lb) to calculate tpy emissions.

2.3.2 New Units - Description of Calculations and Emission Factors

2.3.2.1 Boilers (Units UNMH-BLR-3A through UNMH-BLR-6A)

Emissions from the new boilers are a result of the combustion of natural gas. Emissions for CO, VOC, SO_2 and PM are calculated the same as for the existing boilers as described in Section 2.3.1.1. NO_X emissions for the new boilers are based on a manufacturer-provided outlet concentration of 30 ppm. The same methodology as described in Section 2.3.1.1 was used to convert this value to a lb/MMScf emission factor. HAP emissions for the new boilers are based exclusively on AP-42 Section 1.4, Table 1.4-3.

2.3.2.2 Boilers Diesel Back-up (Units UNMH-BLR-3A through UNMH-BLR-6A)

Emissions associated with the combustion of diesel fuel in the new boilers during emergency situations are calculated exactly as described for the existing units in Section 2.3.1.2. As a conservative estimation; however, instead of using operational records for annual fuel usage, the hourly fuel usage was multiplied by an estimate of 50 hours per year for each boiler. This was utilized to calculate annual fuel usage and thus, tpy emissions.

2.3.2.3 Back-up Diesel Generator (Units UNMH-EG-6A through UNMH-EG-10A)

Emissions from the new generators are a result of the combustion of diesel fuel. NO_x, VOC, CO, and PM combustion emissions are compliant with NSPS IIII emission standards for compression ignition internal combustion engines and are provided by the manufacturer. SO_2 emissions for the generators are based on the AP-42 Table 3.3-1 or 3.4-1 emission factor (depending on hp rating) for SO_2 and the assumption that all units fire ultra-low sulfur diesel (ULSD) with a maximum allowable sulfur content of 15 ppm. HAPs are based on AP-42 Table 3.3-2 or 3.4-3 (depending on hp rating). These are backup units and are limited to 400 hours of operation annually. As such lb/hr emissions for all pollutants are multiplied by 400 hr/yr and converted to tons (1 ton = 2,000 lb) to calculate tpy emissions.

2.3.2.4 Cooling Towers (Units CT-1 through CT-6)

Particulate matter emissions from cooling towers result from the presence of minerals or any dissolved or suspended solids in the cooling water. The process water flows directly over the heat transfer surface of the cooling tower and a fraction of this water is evaporated when air is introduced to the system. The air flowing through the tower can entrain water droplets and carry them out of the tower in a process referred to as drift. Once these drift droplets leave the tower and evaporate, they deposit dissolved or suspended solids as particulate matter (PM_{10} or less). PM emissions are based on the total dissolved solids (TDS) mass concentration, circulation rate (gpm), and drift rate (which is represented as a percentage). The gpm circulation rate is based on manufacturer specifications for the units. The TDS concentration is based on a City of

Albuquerque report of 282 ppm, and the drift rate of 0.02% is based on default NMED guidance and has been confirmed by the manufacturer for these units.

2.4 Emission Calculations

The following are requested examples calculations:

2.4.1 Boiler SO_2 Emissions from Natural Gas Combustion (Example for BLR-3A through BLR-6A)

$$SO_2 Emissions \left(\frac{lb}{hr}\right)$$

$$= Fuel\ S\ Content \left(\frac{50\ gr\ S}{Mscf\ Gas}\right) x\ Hourly\ Fuel\ Usage \left(\frac{6.0\ MScf}{hr}\right) x\ Conversion\ Factor \left(\frac{1\ lb}{7000\ gr}\right) x \left(\frac{64 \frac{lb}{lbmol} SO_2}{32 \frac{lb}{lbmol}\ S}\right)$$

= 0.086 lb/hr SO_2

$$SO_2 Emissions \left(\frac{ton}{yr}\right) = Hourly\ Emissions \left(\frac{0.086\ lb}{hr}\right) x\ Annual\ Hours\ (8760\ hr)\ x\ Conversion \left(\frac{1\ ton}{2000\ lb}\right)$$

= 0.38 tpy

2.4.2 Boiler SO_2 Emissions from Diesel Combustion (Example for BLR-3A through BLR-6A)

$$AP42\ Emissions\ Factor\ in\ lb/Mgal\ (Table\ 1.3-1) = 142S$$
$$Where\ S = Weight\ \%\ of\ Sulfur\ in\ Oil$$
$$Ultra\ Low\ Sulfur\ Diesel\ (USLD) = 15\ ppm\ S\ x\ \frac{1\%}{10{,}000\ ppm} = 0.0015\%$$
$$AP42\ Emissions\ Factor\ (Table\ 1.3-1) = 142S = 142\ x\ 0.0015 = \mathbf{0.213\ lb/Mgal}$$

$$SO_2 Emissions \left(\frac{lb}{hr}\right)$$

$$= AP42\ Emissions\ Factor \left(0.213 \frac{lb}{Mgal}\right) x\ Hourly\ Fuel\ Usage \left(\frac{43\ gal}{hr}\right) x\ Conversion\ Factor \left(\frac{1\ Mgal}{1000\ gal}\right)$$

= 0.0091 lb/hr SO_2

$$SO_2 Emissions \left(\frac{ton}{yr}\right)$$

$$= AP42\ Emissions\ Factor \left(0.213 \frac{lb}{Mgal}\right) x\ Annual\ Fuel\ Usage \left(\frac{2{,}143\ gal}{yr}\right) x\ Conversion\ Factor \left(\frac{1\ Mgal}{1000\ gal}\right)$$

$$= \left(0.46 \frac{lb}{yr}\right) x\ Conversion \left(\frac{1\ ton}{2000\ lb}\right)$$

= 0.00023 tpy

2.4.3 Conversion of ppm to lb/MMscf for NO_X

$$EF\left(\frac{lb}{MMscf}\right) = \left(\frac{C_{ppmv} * F * 1020 * MW}{(10^6 * 385.5)}\right) x\ Temperature\ Correction\ x\ Oxygen\ Correction$$

Where:
C_{ppmvd} = NO_X Concentration (parts per million by volume, dry). Assumed to be 30 ppmv for NO_X.
F = Fuel Exhaust Factor (dscf/MMBtu). Assumed to be 8710 dscf/MMBtu based on 40 CFR 75 Appendix F – Table 1
1020 = Natural Gas Heating Value (Btu/scf). Assumed to be 1000 Btu/scf based on the site specific heating value.
MW = Molecular Weight of NO_2 (lb/lbmol). Assumed to be 46 lb/lbmol for NO_2.
385.5 = Volume Occupied by 1 lbmol of gas at 68°F (scf/lbmol)

$$Temperature\ Correction\ (to\ 68°\text{F}) = \left(\frac{528\ R}{460°R_t + T_{std}°\text{F}}\right)$$

$$Oxygen\ Correction\ (to\ 0\%\ O_2) = \left(\frac{20.9}{20.9 - \%O_2}\right)$$

A temperature above 68°F would effectively result in a temperature correction less than 1. This would effectively decrease the emission factor at a higher temperature, so it was not utilized as part of the conversion form ppmv to lb/MMscf.

The manufacture specifications noted the ppmv value at 3% O_2, so the oxygen correction was utilized.

$$Oxygen\ Correction\ (to\ 0\%\ O_2) = \left(\frac{20.9}{20.9 - 3}\right) = \mathbf{1.167}$$

$$EF\left(\frac{lb}{MMscf}\right) = \left(\frac{30\ ppmv * 8710\frac{dscf}{MMBtu} * 1000\frac{Btu}{scf} * 46\frac{lb}{lbmol}}{(10^6 * 385.5\frac{scf}{lbmol})}\right) x\ 1.167$$

EF = 36.41 lb/MMscf; this was conservatively rounded up to:

= 40 lb/MMscf

University of New Mexico Hospitals
2211 Lomas Blvd. NE Albuquerque, New Mexico

Uncontrolled Emission Source Summary

Emission Unit	NO_x		CO		VOC		SO_2		PM_{10}		$PM_{2.5}$		HAPs		Method(s) Used to Determine Emissions
UNMH-BLR-1A (Natural Gas)	0.92	4.02	1.93	8.45	0.13	0.55	0.33	1.47	0.041	0.18	0.041	0.18	0.26	1.16	AP-42, Manufacturer Specifications, Field Tests
UNMH-BLR-1A (Diesel)	3.35	14.66	0.84	3.67	0.033	0.15	0.036	0.16	0.33	1.47	0.33	1.47	0.0068	0.030	AP-42
UNMH-BLR-2A (Natural Gas)	0.92	4.02	1.93	8.45	0.13	0.55	0.33	1.47	0.041	0.18	0.041	0.18	0.26	1.16	AP-42, Manufacturer Specifications, Field Tests
UNMH-BLR-2A (Diesel)	3.35	14.66	0.84	3.67	0.033	0.15	0.036	0.16	0.33	1.47	0.33	1.47	0.0068	0.030	AP-42
UNMH-BLR-3A (Natural Gas)	0.24	1.03	0.49	2.16	0.032	0.14	0.086	0.38	0.011	0.046	0.011	0.046	0.068	0.30	AP-42, Manufacturer Specifications, Field Tests
UNMH-BLR-3A (Diesel)	0.86	3.75	0.21	0.94	0.0086	0.038	0.0091	0.040	0.086	0.38	0.086	0.38	0.0017	0.0076	AP-42
UNMH-BLR-4A (Natural Gas)	0.24	1.03	0.49	2.16	0.032	0.14	0.086	0.38	0.011	0.046	0.011	0.046	0.068	0.30	AP-42, Manufacturer Specifications, Field Tests
UNMH-BLR-4A (Diesel)	0.86	3.75	0.21	0.94	0.0086	0.038	0.0091	0.040	0.086	0.38	0.086	0.38	0.0017	0.0076	AP-42
UNMH-BLR-5A (Natural Gas)	0.24	1.03	0.49	2.16	0.032	0.14	0.086	0.38	0.011	0.046	0.011	0.046	0.068	0.30	AP-42, Manufacturer Specifications, Field Tests
UNMH-BLR-5A (Diesel)	0.86	3.75	0.21	0.94	0.0086	0.038	0.0091	0.040	0.086	0.38	0.086	0.38	0.0017	0.0076	AP-42
UNMH-BLR-6A (Natural Gas)	0.24	1.03	0.49	2.16	0.032	0.14	0.086	0.38	0.011	0.046	0.011	0.046	0.068	0.30	AP-42, Manufacturer Specifications, Field Tests
UNMH-BLR-6A (Diesel)	0.86	3.75	0.21	0.94	0.0086	0.038	0.0091	0.040	0.086	0.38	0.086	0.38	0.0017	0.0076	AP-42
UNMH-BLR-3B (Natural Gas)	1.13	4.94	2.37	10.37	0.15	0.68	0.41	1.80	0.051	0.22	0.051	0.22	0.32	1.42	AP-42, Manufacturer Specifications, Field Tests
UNMH-BLR-3B (Diesel)	4.11	17.98	1.03	4.50	0.041	0.18	0.044	0.19	0.41	1.80	0.41	1.80	0.0083	0.037	AP-42
UNMH-EG-1A	26.14	114.48	3.90	17.08	1.28	5.62	0.022	0.097	1.27	5.58	1.27	5.58	0.017	0.076	AP-42, Stack Test Data
UNMH-EG-2A	22.18	97.13	12.64	55.38	1.17	5.11	0.027	0.12	0.73	3.20	0.73	3.20	0.021	0.092	AP-42, NSPS Tier II Emission Factors
UNMH-EG-3A	22.18	97.13	12.64	55.38	1.17	5.11	0.027	0.12	0.73	3.20	0.73	3.20	0.021	0.092	AP-42, NSPS Tier II Emission Factors
UNMH-EG-4A	25.13	110.08	14.33	62.76	1.32	5.79	0.030	0.13	0.83	3.62	0.83	3.62	0.024	0.10	AP-42, NSPS Tier II Emission Factors
UNMH-EG-5A	25.13	110.08	14.33	62.76	1.32	5.79	0.030	0.13	0.83	3.62	0.83	3.62	0.024	0.10	AP-42, NSPS Tier II Emission Factors
UNMH-EG-6A	27.54	120.62	1.93	8.46	1.45	6.35	0.035	0.16	0.26	1.13	0.26	1.13	0.028	0.12	AP-42, Manufacturer Specifications
UNMH-EG-7A	27.54	120.62	1.93	8.46	1.45	6.35	0.035	0.16	0.26	1.13	0.26	1.13	0.028	0.12	AP-42, Manufacturer Specifications
UNMH-EG-8A	27.54	120.62	1.93	8.46	1.45	6.35	0.035	0.16	0.26	1.13	0.26	1.13	0.028	0.12	AP-42, Manufacturer Specifications
UNMH-EG-9A	27.54	120.62	1.93	8.46	1.45	6.35	0.035	0.16	0.26	1.13	0.26	1.13	0.028	0.12	AP-42, Manufacturer Specifications
UNMH-EG-10A	2.04	8.92	0.50	2.19	0.11	0.47	0.66	2.91	0.057	0.25	0.057	0.25	0.014	0.06	AP-42, Manufacturer Specifications
CT-1	-	-	-	-	-	-	-	-	0.17	0.73	0.0010	0.0043	-	-	NMED Guidance Document, Manufacturer Specifications
CT-2	-	-	-	-	-	-	-	-	0.17	0.73	0.0010	0.0043	-	-	NMED Guidance Document, Manufacturer Specifications
CT-3	-	-	-	-	-	-	-	-	0.17	0.73	0.0010	0.0043	-	-	NMED Guidance Document, Manufacturer Specifications
CT-4	-	-	-	-	-	-	-	-	0.060	0.26	0.00035	0.0015	-	-	NMED Guidance Document, Unit Specifications
CT-5	-	-	-	-	-	-	-	-	0.060	0.26	0.00035	0.0015	-	-	NMED Guidance Document, Unit Specifications
CT-6	-	-	-	-	-	-	-	-	0.060	0.26	0.00035	0.0015	-	-	NMED Guidance Document, Unit Specifications
Total[1]	**247.17**	**1099.73**	**74.28**	**340.93**	**12.70**	**56.27**	**2.37**	**11.02**	**7.58**	**33.96**	**6.90**	**31.00**	**1.36**	**6.07**	

[1]Since both diesel and natural gas can be combusted but can't be burned simultaneously in the dual-fuel boilers at full load, the uncontrolled hourly (lb/hr) emissions include only the maximum of either operating scenario. Worst-case tpy emissions from dual fuels could be at least partially additive, so uncontrolled annual totals include continuous operation of both fuels as a conservative measure.

University of New Mexico Hospitals
2211 Lomas Blvd. NE Albuquerque, New Mexico

Controlled Emission Source Summary

Emission Unit	NO_x		CO		VOC		SO_2		PM_{10}		$PM_{2.5}$		HAPs		Control Method
UNMH-BLR-1A (Natural Gas)	0.92	4.02	1.93	8.45	0.13	0.55	0.33	1.47	0.041	0.18	0.041	0.18	0.26	1.16	N/A
UNMH-BLR-1A (Diesel)	3.35	0.031	0.84	0.0076	0.033	0.00031	0.036	0.00032	0.33	0.0031	0.33	0.0031	0.0068	0.000062	Hours of Operation
UNMH-BLR-2A (Natural Gas)	0.92	4.02	1.93	8.45	0.13	0.55	0.33	1.47	0.041	0.18	0.041	0.18	0.26	1.16	N/A
UNMH-BLR-2A (Diesel)	3.35	0.031	0.84	0.0076	0.033	0.00031	0.036	0.00032	0.33	0.0031	0.33	0.0031	0.0068	0.000062	Hours of Operation
UNMH-BLR-3A (Natural Gas)	0.24	1.03	0.49	2.16	0.032	0.14	0.086	0.38	0.011	0.046	0.011	0.046	0.068	0.30	N+1 Redundancy
UNMH-BLR-3A (Diesel)	0.86	0.021	0.21	0.0054	0.0086	0.00021	0.0091	0.00023	0.086	0.0021	0.086	0.0021	0.0017	0.000044	Hours of Operation
UNMH-BLR-4A (Natural Gas)	0.24	1.03	0.49	2.16	0.032	0.14	0.086	0.38	0.011	0.046	0.011	0.046	0.068	0.30	N+1 Redundancy
UNMH-BLR-4A (Diesel)	0.86	0.021	0.21	0.0054	0.0086	0.00021	0.0091	0.00023	0.086	0.0021	0.086	0.0021	0.0017	0.000044	Hours of Operation
UNMH-BLR-5A (Natural Gas)	0.24	1.03	0.49	2.16	0.032	0.14	0.086	0.38	0.011	0.046	0.011	0.046	0.068	0.30	N+1 Redundancy
UNMH-BLR-5A (Diesel)	0.86	0.021	0.21	0.0054	0.0086	0.00021	0.0091	0.00023	0.086	0.0021	0.086	0.0021	0.0017	0.000044	Hours of Operation
UNMH-BLR-6A (Natural Gas)	0.24	1.03	0.49	2.16	0.032	0.14	0.086	0.38	0.011	0.046	0.011	0.046	0.068	0.30	N+1 Redundancy
UNMH-BLR-6A (Diesel)	0.86	0.021	0.21	0.0054	0.0086	0.00021	0.0091	0.00023	0.086	0.0021	0.086	0.0021	0.0017	0.000044	Hours of Operation
UNMH-BLR-3B (Natural Gas)	1.13	4.94	2.37	10.37	0.15	0.68	0.41	1.80	0.051	0.22	0.051	0.22	0.32	1.42	N/A
UNMH-BLR-3B (Diesel)	4.11	0.051	1.03	0.013	0.041	0.00051	0.044	0.00054	0.41	0.0051	0.41	0.0051	0.0083	0.00010	Hours of Operation
UNMH-EG-1A	26.14	6.53	3.90	0.98	1.28	0.32	0.022	0.0055	1.27	0.32	1.27	0.32	0.017	0.0043	Hours of Operation
UNMH-EG-2A	22.18	5.54	12.64	3.16	1.17	0.29	0.027	0.0067	0.73	0.18	0.73	0.18	0.021	0.0053	Hours of Operation
UNMH-EG-3A	22.18	5.54	12.64	3.16	1.17	0.29	0.027	0.0067	0.73	0.18	0.73	0.18	0.021	0.0053	Hours of Operation
UNMH-EG-4A	25.13	6.28	14.33	3.58	1.32	0.33	0.030	0.0076	0.83	0.21	0.83	0.21	0.024	0.0060	Hours of Operation
UNMH-EG-5A	25.13	6.28	14.33	3.58	1.32	0.33	0.030	0.0076	0.83	0.21	0.83	0.21	0.024	0.0060	Hours of Operation
UNMH-EG-6A	27.54	5.51	1.93	0.39	1.45	0.29	0.035	0.0071	0.26	0.052	0.26	0.052	0.028	0.0056	Hours of Operation
UNMH-EG-7A	27.54	5.51	1.93	0.39	1.45	0.29	0.035	0.0071	0.26	0.052	0.26	0.052	0.028	0.0056	Hours of Operation
UNMH-EG-8A	27.54	5.51	1.93	0.39	1.45	0.29	0.035	0.0071	0.26	0.052	0.26	0.052	0.028	0.0056	Hours of Operation
UNMH-EG-9A	27.54	5.51	1.93	0.39	1.45	0.29	0.035	0.0071	0.26	0.052	0.26	0.052	0.028	0.0056	Hours of Operation
UNMH-EG-10A	2.04	0.41	0.50	0.10	0.11	0.021	0.66	0.13	0.057	0.011	0.057	0.011	0.014	0.0028	Hours of Operation
CT-1	-	-	-	-	-	-	-	-	0.17	0.73	0.0010	0.0043	-	-	N/A
CT-2	-	-	-	-	-	-	-	-	0.17	0.73	0.0010	0.0043	-	-	N/A
CT-3	-	-	-	-	-	-	-	-	0.17	0.73	0.0010	0.0043	-	-	N/A
CT-4	-	-	-	-	-	-	-	-	0.060	0.26	0.00035	0.0015	-	-	N/A
CT-5	-	-	-	-	-	-	-	-	0.060	0.26	0.00035	0.0015	-	-	N/A
CT-6	-	-	-	-	-	-	-	-	0.060	0.26	0.00035	0.0015	-	-	N/A
Total[1]	**246.32**	**68.88**	**73.79**	**49.92**	**12.67**	**4.96**	**2.28**	**6.05**	**7.49**	**5.03**	**6.82**	**2.07**	**1.29**	**4.68**	

[1] Total emissions are based on the maximum of either natural gas or diesel-fired combustion for all of the boilers and a limitation on the hours of operation for the generators. Per guidance from the AQP, out of the 4 new boilers (Units BLR-3A through BLR-6A) only 3 are included in the total controlled emissions as these units operate in a (N+1) fashion and only 3 units will operate simultaneously. Worst-case tpy emissions from dual fuels could be at least partially additive, so uncontrolled annual totals include continuous operation of both fuels as a conservative measure.

University of New Mexico Hospitals
2211 Lomas Blvd. NE Albuquerque, New Mexico

Unit:	UNMH-BLR-1A and UNMH-BLR-2A
Make:	Hurst
Model:	S4-GP2-700-150
Description:	Boiler

Reboiler Fuel Usage

Fuel Consumption	23.43	MMBtu/hr	Input heat rate
Fuel heat value	1000	Btu/scf	Nominal LHV of fuel gas
Hourly fuel usage	23.4	Mscf/hr	Fuel usage
Annual fuel usage	205.3	MMscf/yr	Annual usage
Operating hours	8760.0	hr/yr	

Based on AP-42 Emission Factors and Zephyr for PM

	NO_x	CO	VOC	SO_2[1]	PM		
					0.0012	lb/MMBtu	PM Emission Factors: Past, Present and Future, Zephyr Corp., 2014
	40.00	84	5.5		1.20	lb/MMscf	Unit emission rates from AP-42 Table 1.4-1 (Assuming average NG heating value of 1,020 Btu/scf). NOx emissions from Manufacturer - based on 30 ppm converted to lb/MMScf per AP-42 Section 1.4 Guidance document.
	39.2	82.4	5.4		1.18	lb/MMscf	Adjusted emission factor: EFF X (Fuel Heat Value/1,020 Btu/scf)
	0.919	1.9	0.126		0.0276	lb/hr	lb/MMscf * (Mscf/hr / 1000 Mscf/1 MMscf)
				50		gr Total Sulfur/Mscf	Pipeline specification. Note: 1 grain = 0.000142857143 pounds
Total	0.92	1.93	0.13	0.33	0.041	**lb/hr**	PM from Zephyr emission factor with safety factor of : **50%**
	4.02	8.45	0.55	1.47	0.18	**tpy**	

[1]SO_2 emissions are calculated based on fuel consumption and fuel sulfur concentration of 5 gr/100 scf (50 gr/Mscf).
SO_2 calculation assumes 100% conversion of fuel elemental sulfur to SO_2.

HCOH	Benzene	Toluene	n-Hexane	Naphthalene	Total HAPs		
1.76E-03	5.62E-08	7.97E-05	0.042	1.43E-05	0.26	lb/hr	Unit emission rates from AP-
7.70E-03	2.46E-07	3.49E-04	0.185	6.26E-05	1.16	tpy	42 Table 1.4-3

GHG Calculations

CO_2[2]	N_2O[2]	CH_4[2]	CO_2e[2]		
53.06	0.0001	0.001		kg/MMBtu	40 CFR 98 Subpart C Tables C-1 and C-2
1	298	25		GWP	40 CFR 98 Table A-1
12005.5	*0.0226*	*0.226*		tpy	
12005.5	**6.74**	**5.66**	**12017.9**	tpy CO_2e	

[2]N_2O, CH_4, and CO_2 tpy Emission Rate= EF* Fuel Usage * Fuel Heat Value * 2.20462 lb/1 kg * 1 ton/2000 lb
CO_2e tpy Emission Rate = CO_2 Emission Rate + N_2O Emission Rate*GWP Factor +CH_4 Emission Rate*GWP Factor

Site Data

Site Elevation	5140	ft MSL	
Standard Pressure	29.92	in Hg	
Pressure at Elevation	24.76	in Hg	Hess, Introduction to Theoretical Meteorology, eqn. 6.8
Standard Temperature	528	R	

Boiler Stack Parameters

320	°F	Exhaust temp
40.90	ft	Stack height
2.50	ft	Stack diameter
10610	wscf/10e6 Btu	
4144	scfm	Exhaust flow
7397	acfm	Exhaust flow
25.11	ft/sec	Exhaust velocity

Table 1.4-3. Emission Factors for Speciated Organic Compounds from Natural Gas Combustion

Pollutant	Emission Factor (lb/MMscf)	Emission Rate (lb/hr)
2-Methylnaphthalene	2.40E-05	5.62E-07
3-Methylcholanthrene	1.80E-06	4.22E-08
7,12-Dimethylbenz(a)anthracene	1.60E-05	3.75E-07
Acenaphthene	1.80E-06	4.22E-08
Benz(a)anthracene	1.80E-06	4.22E-08
Benzene	2.40E-06	5.62E-08
Benzo(a)pyrene	1.80E-06	4.22E-08
Benzo(b)fluoranthene	2.10E-03	4.92E-05
Benzo(g,h,i)perylene	1.20E-06	2.81E-08
Benzo(k)fluoranthene	1.80E-06	4.22E-08
Butane	2.1	4.92E-02
Chrysene	1.80E-06	4.22E-08
Dibenzo(a,h)anthracene	1.20E-06	2.81E-08
Dichlorobenzene	1.20E-03	2.81E-05
Ethane	3.1	7.26E-02
Fluoranthene	3.00E-06	7.03E-08
Fluorene	2.80E-06	6.56E-08
Formaldehyde	7.50E-02	1.76E-03
Hexane	1.8	4.22E-02
Indeno(1,2,3-cd)pyrene	1.80E-06	4.22E-08
Napthalene	6.10E-04	1.43E-05
Pentane	2.6	6.09E-02
Phenanathrene	1.70E-05	3.98E-07
Propane	1.6	3.75E-02
Pyrene	5.00E-06	1.17E-07
Toluene	3.40E-03	7.97E-05
Total HAPs (lb/hr)		**0.26**

University of New Mexico Hospitals
2211 Lomas Blvd. NE Albuquerque, New Mexico

Unit:	UNMH-BLR-3A, 4A, 5A, 6A
Make:	Riello
Model:	RTC 6000
Description:	Boiler

Reboiler Fuel Usage

Fuel Consumption	6.00	MMBtu/hr	Input heat rate
Fuel heat value	1000	Btu/scf	Nominal LHV of fuel gas
Hourly fuel usage	6.0	Mscf/hr	Fuel usage
Annual fuel usage	52.6	MMscf/yr	Annual usage
Operating hours	8760.0	hr/yr	

Based on AP-42 Emission Factors and Zephyr for PM

	NO_x	CO	VOC	SO_2[1]	PM		
					0.0012	lb/MMBtu	PM Emission Factors: Past, Present and Future, Zephyr Corp., 2014
	40.00	84	5.5		1.20	lb/MMscf	Unit emission rates from AP-42 Table 1.4-1 (Assuming average NG heating value of 1,020 Btu/scf). NOx emissions from Manufacturer - based on 30 ppm converted to lb/MMScf per AP-42 Section 1.4 Guidance document.
	39.2	82.4	5.4		1.18	lb/MMscf	Adjusted emission factor: EFF X (Fuel Heat Value/1,020 Btu/scf)
	0.235	0.5	0.032		0.0071	lb/hr	lb/MMscf * (Mscf/hr / 1000 Mscf/1 MMscf)
				50		gr Total Sulfur/Mscf	Pipeline specification. Note: 1 grain = 0.000142857143 pounds
Total	0.24	0.49	0.032	0.086	0.011	**lb/hr**	PM from Zephyr emission factor with safety factor of : **50%**
	1.03	2.16	0.14	0.38	0.046	**tpy**	

[1]SO_2 emissions are calculated based on fuel consumption and fuel sulfur concentration of 5 gr/100 scf (50 gr/Mscf).
SO_2 calculation assumes 100% conversion of fuel elemental sulfur to SO_2.

HCOH	Benzene	Toluene	n-Hexane	Naphthalene	Total HAPs		
4.50E-04	1.44E-08	2.04E-05	0.011	3.66E-06	0.068	lb/hr	Unit emission rates from AP-
1.97E-03	6.31E-08	8.94E-05	0.047	1.60E-05	0.30	tpy	42 Table 1.4-3

GHG Calculations

CO_2[2]	N_2O[2]	CH_4[2]	CO_2e[2]		
53.06	0.0001	0.001		kg/MMBtu	40 CFR 98 Subpart C Tables C-1 and C-2
1	298	25		GWP	40 CFR 98 Table A-1
3074.1	*0.0058*	*0.058*		tpy	
3074.1	**1.73**	**1.45**	**3077.3**	tpy CO_2e	

[2]N_2O, CH_4, and CO_2 tpy Emission Rate= EF* Fuel Usage * Fuel Heat Value * 2.20462 lb/1 kg * 1 ton/2000 lb
CO_2e tpy Emission Rate = CO_2 Emission Rate + N_2O Emission Rate*GWP Factor +CH_4 Emission Rate*GWP Factor

Site Data

Site Elevation	5140	ft MSL	
Standard Pressure	29.92	in Hg	
Pressure at Elevation	24.76	in Hg	Hess, Introduction to Theoretical Meteorology, eqn. 6.8
Standard Temperature	528	R	

Boiler Stack Parameters

240	°F	Exhaust temp	30.00	ppm
69	ft	Stack height	29.95	lb/lbmol
0.85	ft	Stack diameter	0.0749	lb/dscf
4200.0	cfm	Exhaust flow	0.945315526	lb/hr
122.16	ft/sec	Exhaust velocity		

Table 1.4-3. Emission Factors for Speciated Organic Compounds from Natural Gas Combustion

Pollutant	Emission Factor (lb/MMscf)	Emission Rate (lb/hr)
2-Methylnaphthalene	2.40E-05	1.44E-07
3-Methylcholanthrene	1.80E-06	1.08E-08
7,12-Dimethylbenz(a)anthracene	1.60E-05	9.60E-08
Acenaphthene	1.80E-06	1.08E-08
Benz(a)anthracene	1.80E-06	1.08E-08
Benzene	2.40E-06	1.44E-08
Benzo(a)pyrene	1.80E-06	1.08E-08
Benzo(b)fluoranthene	2.10E-03	1.26E-05
Benzo(g,h,i)perylene	1.20E-06	7.20E-09
Benzo(k)fluoranthene	1.80E-06	1.08E-08
Butane	2.1	1.26E-02
Chrysene	1.80E-06	1.08E-08
Dibenzo(a,h)anthracene	1.20E-06	7.20E-09
Dichlorobenzene	1.20E-03	7.20E-06
Ethane	3.1	1.86E-02
Fluoranthene	3.00E-06	1.80E-08
Fluorene	2.80E-06	1.68E-08
Formaldehyde	7.50E-02	4.50E-04
Hexane	1.8	1.08E-02
Indeno(1,2,3-cd)pyrene	1.80E-06	1.08E-08
Napthalene	6.10E-04	3.66E-06
Pentane	2.6	1.56E-02
Phenanathrene	1.70E-05	1.02E-07
Propane	1.6	9.60E-03
Pyrene	5.00E-06	3.00E-08
Toluene	3.40E-03	2.04E-05
Total HAPs (lb/hr)		**0.068**

University of New Mexico Hospitals
2211 Lomas Blvd. NE Albuquerque, New Mexico

Unit:	UNMH-BLR-3B
Make:	Cleaver-Brooks CB-LE 700
Model:	CB-LE 700
Description:	Boiler

Reboiler Fuel Usage

Fuel Consumption	28.74	MMBtu/hr	Input heat rate
Fuel heat value	1000	Btu/scf	Nominal LHV of fuel gas
Hourly fuel usage	28.7	Mscf/hr	Fuel usage
Annual fuel usage	251.8	MMscf/yr	Annual usage
Operating hours	8760.0	hr/yr	

Based on AP-42 Emission Factors

	NO_x	CO	VOC	SO_2[1]	PM			
					0.0012	lb/MMBtu	PM Emission Factors: Past, Present and Future, Zephyr Corp., 2014	
	40.00	84	5.5		1.2	lb/MMscf	Unit emission rates from AP-42 Table 1.4-1 (Assuming average NG heating value of 1,020 Btu/scf). NOx emissions from Manufacturer - based on 30 ppm converted to lb/MMScf per AP-42 Section 1.4 Guidance document.	
	39.2	82.4	5.4		1.2	lb/MMscf	Adjusted emission factor: EFF X (Fuel Heat Value/1,020 Btu/scf)	
	1.1	2.4	0.155		0.034	lb/hr	lb/MMscf * (Mscf/hr / 1000 Mscf/1 MMscf)	
				50		gr Total Sulfi	Pipeline Specification	
Total	**1.13**	**2.37**	**0.15**	**0.41**	**0.051**	**lb/hr**	PM from Zephyr emission factor with safety factor of	**50%**
	4.94	**10.37**	**0.68**	**1.80**	**0.22**	**tpy**		

Emission Rates for Modeling

NO_x	CO	VOC	SO_2	PM	
1.13	2.37	0.15	0.41	0.051	**lb/hr**
4.94	10.37	0.68	1.80	**0.22**	**tpy**

[1]SO_2 emissions are calculated based on fuel consumption and fuel sulfur concentration of 5 gr/100 scf (50 gr/Mscf).
SO_2 calculation assumes 100% conversion of fuel elemental sulfur to SO_2.

HCOH	Benzene	Toluene	n-Hexane	Naphthalene	Total HAPs		
2.16E-03	6.90E-08	9.77E-05	5.17E-02	1.75E-05	0.32	lb/hr	Unit emission rates from AP-
9.44E-03	3.02E-07	4.28E-04	2.27E-01	7.68E-05	1.42	tpy	42 Table 1.4-3

GHG Calculations

CO_2[2]	N_2O[2]	CH_4[2]	CO_2e[2]		
53.06	0.0001	0.001		kg/MMBtu	40 CFR 98 Subpart C Tables C-1 and C-2
1	298	25		GWP	40 CFR 98 Table A-1
14725.1	*0.0278*	*0.278*		tpy	
14725.1	**8.27**	**6.94**	**14740.3**	tpy CO_2e	

[2]N_2O, CH_4, and CO_2 tpy Emission Rate= EF* Fuel Usage * Fuel Heat Value * 2.20462 lb/1 kg * 1 ton/2000 lb
CO_2e tpy Emission Rate = CO_2 Emission Rate + N_2O Emission Rate*GWP Factor +CH_4 Emission Rate*GWP Factor

Site Data

Site Elevation	5140	ft MSL	
Standard Pressure	29.92	in Hg	
Pressure at Elevation	24.76	in Hg	Hess, Introduction to Theoretical Meteorology, eqn. 6.8
Standard Temperature	528	R	

Reboiler Stack Parameters

330	°F	Exhaust temp
40.90	ft	Stack height
2.00	ft	Stack diameter
10610	wscf/10e6 Btu	
5082	scfm	Exhaust flow
9188	acfm	Exhaust flow
48.75	ft/sec	Exhaust velocity

Table 1.4-3. Emission Factors for Speciated Organic Compounds from Natural Gas Combustion

Pollutant	Emission Factor (lb/MMscf)	Emission Rate (lb/hr)
2-Methylnaphthalene	2.40E-05	6.90E-07
3-Methylcholanthrene	1.80E-06	5.17E-08
7,12-Dimethylbenz(a)anthracene	1.60E-05	4.60E-07
Acenaphthene	1.80E-06	5.17E-08
Benz(a)anthracene	1.80E-06	5.17E-08
Benzene	2.40E-06	6.90E-08
Benzo(a)pyrene	1.80E-06	5.17E-08
Benzo(b)fluoranthene	2.10E-03	6.04E-05
Benzo(g,h,i)perylene	1.20E-06	3.45E-08
Benzo(k)fluoranthene	1.80E-06	5.17E-08
Butane	2.1	6.04E-02
Chrysene	1.80E-06	5.17E-08
Dibenzo(a,h)anthracene	1.20E-06	3.45E-08
Dichlorobenzene	1.20E-03	3.45E-05
Ethane	3.1	8.91E-02
Fluoranthene	3.00E-06	8.62E-08
Fluorene	2.80E-06	8.05E-08
Formaldehyde	7.50E-02	2.16E-03
Hexane	1.8	5.17E-02
Indeno(1,2,3-cd)pyrene	1.80E-06	5.17E-08
Napthalene	6.10E-04	1.75E-05
Pentane	2.6	7.47E-02
Phenanathrene	1.70E-05	4.89E-07
Propane	1.6	4.60E-02
Pyrene	5.00E-06	1.44E-07
Toluene	3.40E-03	9.77E-05
Total HAPs (lb/hr)		**0.32**

University of New Mexico Hospitals
2211 Lomas Blvd. NE Albuquerque, New Mexico

Description:

Manufacturer Provided NO_X Concentration

30.0 **ppmv**

Description	Value	Units	Note
NO_X Concentration by volume	30.0	ppmv	Provided by Manufacturer
Fuel Exhaust Factor (F-Factor)	8710.00	dscf/MMBtu	40 CFR 75 Appendix F - Table 1
Heating Value	1000.00	Btu/scf	Nominal for Natural Gas at Site
Molecular Weight	46.00	lb/lb-mol	MW of NO_2
Conversion Factor	385.50	scf/lb-mol	AP-42 Provided Conversion Factor
Emission Factor	**36.41**	**lb/MMScf**	**Emission Factor Documentation Methodology for AP-42 Section 1.4**
Emission Factor Rounded	**40.00**	**lb/MMScf**	**Rounded Up as a Conservative Assumption**
Oxygen Correction			
O_2 in Air	20.90	%	Assumed
% O_2 for MFG ppm value	3.00	%	Provided by Manufacturer
Oxygen Correction	1.17	-	-

[1] Emission factor conversion based on methodology described in "Emission Factor Documentation for AP-42 Section 1.4 Natural Gas Combustion (March 1998)"
Temperature correction would decrease the emission factor for any value above 68°F. As such, as a conservative assumption, no temperature correction was taken into account.
Equations shown below and included in the supporting documentation section:

$$EF_{scf} = \frac{(C_{ppmvd} * F * 1{,}020 * MW)}{(10^6 * 385.5)} * \text{temperature correction} * \text{oxygen correction}$$

$$\begin{array}{c}\text{Temperature correction}\\ \text{for F-Factor}\\ \text{(to 68°F)}\end{array} = \left(\frac{528\,°R}{460\,°R_t + T_{std}\,°F}\right)$$

$$\begin{array}{c}\text{Oxygen correction}\\ \text{(to 0\% } O_2\text{)}\end{array} = \left(\frac{20.9}{20.9 - \%O_2}\right)$$

University of New Mexico Hospitals
2211 Lomas Blvd. NE Albuquerque, New Mexico

Boiler Emissions using Back Up Fuel (Diesel) with limited annual throughput

Emission Units: UNMH BLR-1A, UNMH-BLR-2A

Fuel Consumption
Diesel

23.43	MMBtu/hr	Heat rate	Maximum Heat Rate (Campus Limited)
140	MBtu/gal	Fuel heat value	AP-42 (5/10) Page 1.3-8, bottom paragraph
167	gal/hr	Max. Fuel consumption	Heat rate ÷ fuel heat value
3,050	gal/yr	Annual fuel usage	from UNMH's operations records
15	ppm	Max sulfur in ULSD mixed into Dc blr diesel	
0.21	lb/Mgal	Max "S" sulfur in Dc blr diesel	10,000 ppm = 1%, and footnote b in AP-42 (5/10) Table 1.3-1

Emission Calculations

CO	NOx	VOC	SOx	PM	Units	
5	20	0.2	0.21	2	lb/Mgal	AP-42 (5/10) Table 1.3-1, 2, and 3
0.84	3.35	0.033	0.036	0.33	lb/hr	Emission Factor * Fuel Consumption
3.67	14.66	0.15	0.16	1.47	tons/yr	PER - Uncontrolled
0.0076	0.031	0.00031	0.00032	0.0031	tons/yr	PTE - lb/Mgal * 1Mgal/1000 gal * gal/yr * 1 ton/2000 lb

HCOH	Benzene	Toluene	n-Hexane	Naphthalene	O-Xylene	Total HAPs		
3.30E-02	2.14E-04	6.20E-03	-	1.13E-03	1.09E-04		lb/Mgal	AP-42 Table 1.3-9
5.52E-03	3.58E-05	1.04E-03	-	1.89E-04	1.82E-05	0.0068	lb/hr	Emission Factor * Fuel Consumption
2.42E-02	1.57E-04	4.55E-03	-	8.28E-04	7.99E-05	0.030	tons/yr	PER - Uncontrolled
5.03E-05	3.26E-07	9.46E-06		1.72E-06	1.66E-07	0.000062	tons/yr	PTE - lb/Mgal * 1Mgal/1000 gal * gal/yr * 1 ton/2000 lb

Emission Units: UNMH-BLR-3A, 4A, 5A, 6A

Fuel Consumption
Diesel

6	MMBtu/hr	Heat rate	Maximum Heat Rate (Campus Limited)
140	MBtu/gal	Fuel heat value	AP-42 (5/10) Page 1.3-8, bottom paragraph
43	gal/hr	Max. Fuel consumption	Heat rate ÷ fuel heat value
50	hr/yr		
2,143	gal/yr	Annual fuel usage	
15	ppm	Max sulfur in ULSD mixed into Dc blr diesel	
0.21	lb/Mgal	Max "S" sulfur in Dc blr diesel	10,000 ppm = 1%, and footnote b in AP-42 (5/10) Table 1.3-1

Emission Calculations

CO	NOx	VOC	SOx	PM	Units	
5	20	0.2	0.21	2	lb/Mgal	AP-42 (5/10) Table 1.3-1, 2, and 3
0.21	0.86	0.0086	0.0091	0.086	lb/hr	Emission Factor * Fuel Consumption
0.94	3.75	0.038	0.040	0.38	tons/yr	PER - Uncontrolled
0.0054	0.021	0.00021	0.00023	0.0021	tons/yr	PTE - lb/Mgal * 1Mgal/1000 gal * gal/yr * 1 ton/2000 lb

HCOH	Benzene	Toluene	n-Hexane	Naphthalene	O-Xylene	Total HAPs		
3.30E-02	2.14E-04	6.20E-03	-	1.13E-03	1.09E-04		lb/Mgal	AP-42 Table 1.3-9
1.41E-03	9.17E-06	2.66E-04	-	4.84E-05	4.67E-06	0.0017	lb/hr	Emission Factor * Fuel Consumption
6.19E-03	4.02E-05	1.16E-03	-	2.12E-04	2.05E-05	0.0076	tons/yr	PER - Uncontrolled
3.54E-05	2.29E-07	6.64E-06	-	1.21E-06	1.17E-07	0.000044	tons/yr	PTE - lb/Mgal * 1Mgal/1000 gal * gal/yr * 1 ton/2000 lb

Emission Unit: UNMH-BLR-3B

Fuel Consumption
Diesel

28.74	MMBtu/hr	Heat rate	Maximum Heat Rate (Campus Limited)
140	MBtu/gal	Fuel heat value	AP-42 (5/10) Page 1.3-8, bottom paragraph
205	gal/hr	Max. Fuel consumption	Heat rate ÷ fuel heat value
5,100	gal/yr	Annual fuel usage	from UNMH's operations records
15	ppm	Max sulfur in ULSD mixed into Dc blr diesel	
0.21	lb/Mgal	Max "S" sulfur in Dc blr diesel	10,000 ppm = 1%, and footnote b in AP-42 (5/10) Table 1.3-1

Emission Calculations

CO	NOx	VOC	SOx	PM	Units	
5	20	0.2	0.21	2	lb/Mgal	AP-42 (5/10) Table 1.3-1, 2, and 3
1.03	4.11	0.041	0.044	0.41	lb/hr	Emission Factor * Fuel Consumption
4.50	17.98	0.18	0.19	1.80	tons/yr	PER - Uncontrolled
0.013	0.051	0.00051	0.00054	0.0051	tons/yr	PTE - lb/Mgal * 1Mgal/1000 gal * gal/yr * 1 ton/2000 lb

HCOH	Benzene	Toluene	n-Hexane	Naphthalene	O-Xylene	Total HAPs		
3.3E-02	2.1E-04	6.2E-03	-	1.1E-03	1.1E-04		lb/Mgal	AP-42 Table 1.3-9
6.8E-03	4.4E-05	1.3E-03	-	2.3E-04	2.2E-05	0.0083	lb/hr	Emission Factor * Fuel Consumption
3.0E-02	1.9E-04	5.6E-03	-	1.0E-03	9.8E-05	0.037	tons/yr	PER - Uncontrolled
8.4E-05	5.5E-07	1.6E-05	-	2.9E-06	2.8E-07	0.00010	tons/yr	PTE - lb/Mgal * 1Mgal/1000 gal * gal/yr * 1 ton/2000 lb

University of New Mexico Hospitals
2211 Lomas Blvd. NE Albuquerque, New Mexico

Unit: UNMH-EG-1A
Make: Caterpillar
Model: 3512B
Description: PRE-NSPS Engine
Fuel Type: **Diesel**

Generator
1,820.0 hp engine

Criteria Air Pollutants	EG-1A	Maximum Stack Tested	Safety Factor	EPA AP-42		NSPS Nonroad Limits	Values for Permit Application Forms						Emission Factor Reference
	6/3/2014			Emission Factor[1]		Emission Limit	Emission Factor	Hourly Emissions		Annual Emissions[2]		Potential	
	lbs/hr		%	(lb/hp-hr)	(g/hp-hr)	(g/hp-hr)	(g/hp-hr)	g/hr	lb/hr	lb/yr	ton/yr	ton/yr	
Nitrogen Oxides	21.78	21.78	20.00%						26.14	13,068.0	6.53	114.48	Stack Test Data
Carbon Monoxide	3.25	3.25	20.00%						3.90	1,950.0	0.98	17.08	
Sulfur Oxides[3]				1.21E-05	0.0055	Pre-NSPS	0.0055	10.0	0.022	11.0	0.0055	0.097	AP-42 Table 3.4-1, Diesel Fuel
Particulate Matter[4]				7.00E-04	0.32	Pre-NSPS	0.32	577.9	1.27	637.0	0.32	5.58	
Volatile Organic Compounds				7.05E-04	0.32	Pre-NSPS	0.32	582.0	1.28	641.6	0.32	5.62	
				lb/MMBtu	lb/hp-hr [5]								
Benzene				7.76E-04	5.43E-06	Pre-NSPS			0.0099	4.9	2.5E-03	4.3E-02	AP-42 Table 3.4-3, Diesel Fuel
Toluene				2.81E-04	1.97E-06	Pre-NSPS			0.0036	1.8	8.9E-04	1.6E-02	
Xylenes				1.93E-04	1.35E-06	Pre-NSPS			0.0025	1.2	6.1E-04	1.1E-02	
Formaldehyde				7.89E-05	5.52E-07	Pre-NSPS			0.0010	0.5	2.5E-04	4.4E-03	
Acetaldehyde				2.52E-05	1.76E-07	Pre-NSPS			0.00032	0.2	8.0E-05	1.4E-03	
Acrolein				7.88E-06	5.52E-08	Pre-NSPS			0.00010	0.05	2.5E-05	4.4E-04	
								Σ =	0.017	Σ =	0.0043	0.076	

The generator operates a maximum of: **500.0**

[1] Emission factors from EPA AP-42 Section 3.4 Large Diesel Stationary Diesel Engines, Table 3.4-1 (October 1996), for generators greater than 600 hp.
AP-42 Volatile Organic Compounds conservatively assumed to be Total Organic Compounds (TOC).

[2] The following equation was used to calculate annual emissions for each pollutant:
Annual emissions (lb/yr) = Hourly emissions (lb/hr) * 500 (hrs/yr)
Annual emissions (ton/yr) = Hourly emissions (lb/hr) * 500 (hrs/yr) / 2000 (lb/ton)

[3] SOx emission factor is the EPA AP-42 emission factor (Table 3.4-1). Assumes ULSD value of 15 ppm (S_1 = 0.0015)

[4] Particulate matter emissions are considered to be < 10 µm in size. Therefore PM emissions also reflect particulate matter less than 10 µm (PM_{10}) and particulate matter less than 2.5 µm ($PM_{2.5}$).

[5] AP-42 (10/96) Table 3.3-1, footnote "a" says 7,000 Btu = 1 hp-hr (.007mmBtu = 1hp-hr)

University of New Mexico Hospitals
2211 Lomas Blvd. NE Albuquerque, New Mexico

Unit: UNMH-EG-2A / UNMH-EG-3A
Make: Caterpillar
Model: 3512 C
Description: NSPS Engine
Fuel Type: **Diesel**

Generator
2,206.0 hp engine

Criteria Air Pollutants	Emission Factor		NSPS Nonroad Tier 2 Limits	Values for Permit Application Forms						Emission Factor Reference
			Emission Limit	Emission Factor	Hourly Emissions		Annual Emissions[2]		Potential	
	(lb/hp-hr)	(g/hp-hr)	(g/hp-hr)	(g/hp-hr)	g/hr	lb/hr	lb/yr	ton/yr	ton/yr	
Nitrogen Oxides[1]	-	-	4.56	4.56	10,059.4	22.18	11,088.4	5.54	97.13	NSPS Nonroad Tier 2 Limits
Carbon Monoxide[1]	-	-	2.60	2.60	5,735.6	12.64	6,322.3	3.16	55.38	
Sulfur Oxides[3]	1.21E-05	5.50E-03	-	0.0055	12.1	0.027	-	0.0067	0.12	AP-42 Table 3.4-3, Diesel Fuel
Particulate Matter[1,4]	-	-	0.15	0.15	330.9	0.73	364.7	0.18	3.20	NSPS Nonroad Tier 2 Limits
Volatile Organic Compounds	7.05E-04	0.32	0.24	0.24	529.4	1.17	583.6	0.29	5.11	
	lb/MMBtu	lb/hp-hr[5]								
Benzene	7.76E-04	5.43E-06	-			0.0120	6.0	3.0E-03	5.2E-02	AP-42 Table 3.4-3, Diesel Fuel
Toluene	2.81E-04	1.97E-06	-			0.0043	2.2	1.1E-03	1.9E-02	
Xylenes	1.93E-04	1.35E-06	-			0.0030	1.5	7.5E-04	1.3E-02	
Formaldehyde	7.89E-05	5.52E-07	-			0.0012	0.6	3.0E-04	5.3E-03	
Acetaldehyde	2.52E-05	1.76E-07	-			0.00039	0.2	9.7E-05	1.7E-03	
Acroline	7.88E-06	5.52E-08	-			0.00012	0.06	3.0E-05	5.3E-04	
					Σ =	0.021	Σ =	0.0053	0.092	

The generator operates a maximum of: **500.00** **hours per year** and must be powered by ultra low sulfur diesel (ULSD) fuel.

[1] Emission factors based on Tier II limits and CARB Guidance regarding 95% NO_X and 5% VOC split for NMHC + NO_X Emission Factor

[2] The following equation was used to calculate annual emissions for each pollutant:
Annual emissions (lb/yr) = Hourly emissions (lb/hr) * 500 (hrs/yr)
Annual emissions (ton/yr) = Hourly emissions (lb/hr) * 500 (hrs/yr) / 2000 (lb/ton)

[3] SOx emission factor is the EPA AP-42 emission factor (Table 3.4-1). Assumes ULSD value of 15 ppm (S_1 = 0.0015)

[4] Particulate matter emissions are considered to be < 10 µm in size. Therefore PM emissions also reflect particulate matter less than 10 µm (PM_{10}) and particulate matter less than 2.5 µm ($PM_{2.5}$).

[5] AP-42 (10/96) Table 3.3-1, footnote "a" says 7,000 Btu = 1 hp-hr (.007mmBtu = 1hp-hr)

University of New Mexico Hospitals
2211 Lomas Blvd. NE Albuquerque, New Mexico

Unit: UNMH-EG-4A / UNMH-EG-5A
Make: Caterpillar
Model: 3512 CDITA
Description: NSPS Engine
Fuel Type: **Diesel**

Generator
2,500.0 hp engine

Criteria Air Pollutants	EPA AP-42		NSPS Nonroad Tier 2 Limits	Values for Permit Application Forms						Emission Factor Reference
	Emission Factor[1]		Emission Limit	Emission Factor	Hourly Emissions		Annual Emissions[2]		Potential	
	(lb/hp-hr)	(g/hp-hr)	(g/hp-hr)	(g/hp-hr)	g/hr	lb/hr	lb/yr	ton/yr	ton/yr	
Nitrogen Oxides[3]	-	-	4.56	4.56	11,400.0	25.13	12,566.1	6.28	110.08	NSPS Tier II
Carbon Monoxide	-	-	2.60	2.60	6,500.0	14.33	7,164.9	3.58	62.76	
Sulfur Oxides[4]	1.21E-05	0.0055	-	0.0055	13.8	0.030	15.2	0.0076	0.13	AP-42 Table 3.4-1, Diesel Fuel
Particulate Matter[5]	-	-	0.15	0.15	375.0	0.83	413.4	0.21	3.62	NSPS Tier II
Volatile Organic Compounds	-	-	0.24	0.24	600.0	1.32	661.4	0.33	5.79	
	lb/MMBtu	lb/hp-hr[6]								
Benzene	7.76E-04	5.43E-06	-			0.0136	6.8	3.4E-03	5.9E-02	AP-42 Table 3.4-3, Diesel Fuel
Toluene	2.81E-04	1.97E-06	-			0.0049	2.5	1.2E-03	2.2E-02	
Xylenes	1.93E-04	1.35E-06	-			0.0034	1.7	8.4E-04	1.5E-02	
Formaldehyde	7.89E-05	5.52E-07	-			0.0014	0.7	3.5E-04	6.0E-03	
Acetaldehyde	2.52E-05	1.76E-07	-			0.00044	0.2	1.1E-04	1.9E-03	
Acroline	7.88E-06	5.52E-08	-			0.00014	0.07	3.4E-05	6.0E-04	
					Σ =	0.024	Σ =	0.0060	0.10	

The generator operates a maximum of: **500.0** **hours per year** and must be powered by ultra low sulfur diesel (ULSD) fuel.

[1] Emission factors from EPA AP-42 Section 3.4 Large Diesel Stationary Diesel Engines, Table 3.4-1 (October 1996), for generators greater than 600 hp.
AP-42 Volatile Organic Compounds conservatively assumed to be Total Organic Compounds (TOC).

[2] The following equation was used to calculate annual emissions for each pollutant:
Annual emissions (lb/yr) = Hourly emissions (lb/hr) * 500 (hrs/yr)
Annual emissions (ton/yr) = Hourly emissions (lb/hr) * 500 (hrs/yr) / 2000 (lb/ton)

[3] City AQP recommends 6/28/04 CARB policy to split NSPS IIII NOx+HC emission factor into 95% NOx and 5% HC

[4] SOx emission factor is the EPA AP-42 emission factor (Table 3.4-1). Assumes ULSD value of 15 ppm (S_1 = 0.0015)

[5] Particulate matter emissions are considered to be < 10 µm in size. Therefore PM emissions also reflect particulate matter less than 10 µm (PM_{10}) and particulate matter less than 2.5 µm ($PM_{2.5}$).

[6] AP-42 (10/96) Table 3.3-1, footnote "a" says 7,000 Btu = 1 hp-hr (.007mmBtu = 1hp-hr)

University of New Mexico Hospitals
2211 Lomas Blvd. NE Albuquerque, New Mexico

Unit: UNMH-EG-6A, 7A, 8A, 9A
Make: Cummins
Model: QSK60-G6 NR2
Description: NSPS IIII Engine
Fuel Type: **Diesel**

Generator
2,922.0 hp engine

Criteria Air Pollutants	EPA AP-42		Values for Permit Application Forms						Emission Factor Reference
	Emission Factor[1]		Emission Factor	Hourly Emissions		Annual Emissions[2]		Potential	
	(lb/hp-hr)	(g/hp-hr)	(g/hp-hr)	g/hr	lb/hr	lb/yr	ton/yr	ton/yr	
Nitrogen Oxides	-	-	4.28	12,491.55	27.54	11,015.48	5.51	120.62	Manufacturer Data
Carbon Monoxide	-	-	0.30	876.60	1.93	773.02	0.39	8.46	
Sulfur Oxides[3]	1.21E-05	0.0055	0.0055	16.08	0.035	14.18	0.0071	0.16	AP-42 Table 3.4-1, Diesel Fuel
Particulate Matter[4]	-	-	0.040	116.88	0.26	103.07	0.052	1.13	Manufacturer Data
Volatile Organic Compounds	-	-	0.23	657.45	1.45	579.76	0.29	6.35	
	lb/MMBtu	lb/hp-hr[5]							
Benzene	7.76E-04	5.43E-06			0.0159	6.3	3.2E-03	7.0E-02	AP-42 Table 3.4-3, Diesel Fuel
Toluene	2.81E-04	1.97E-06			0.0057	2.3	1.1E-03	2.5E-02	
Xylenes	1.93E-04	1.35E-06			0.0039	1.6	7.9E-04	1.7E-02	
Formaldehyde	7.89E-05	5.52E-07			0.0016	0.6	3.2E-04	7.1E-03	
Acetaldehyde	2.52E-05	1.76E-07			0.00052	0.2	1.0E-04	2.3E-03	
Acroline	7.88E-06	5.52E-08			0.00016	0.06	3.2E-05	7.1E-04	
				Σ =	0.028	Σ =	0.0056	0.12	

The generator operates a maximum of: **400.0** **hours per year** and must be powered by ultra low sulfur diesel (ULSD) fuel.

[1] Emission factors from EPA AP-42 Section 3.4 Large Diesel Stationary Diesel Engines, Table 3.4-1 (October 1996), for generators greater than 600 hp.
AP-42 Volatile Organic Compounds conservatively assumed to be Total Organic Compounds (TOC). CARB assumption of 95% NO_X and 5% VOC split for NMHC + NO_X Emission Factor was used.

[2] The following equation was used to calculate annual emissions for each pollutant:
Annual emissions (lb/yr) = Hourly emissions (lb/hr) * 500 (hrs/yr)
Annual emissions (ton/yr) = Hourly emissions (lb/hr) * 500 (hrs/yr) / 2000 (lb/ton)

[3] SOx emission factor is the EPA AP-42 emission factor (Table 3.4-1). Assumes ULSD value of 15 ppm (S_1 = 0.0015)

[4] Particulate matter emissions are considered to be < 10 µm in size. Therefore PM emissions also reflect particulate matter less than 10 µm (PM_{10}) and particulate matter less than 2.5 µm ($PM_{2.5}$).

[5] AP-42 (10/96) Table 3.4-1, footnote "a" says 7,000 Btu = 1 hp-hr (.007mmBtu = 1hp-hr)

UNMH - BBRP Emergency Generator

Unit:	UNMH-EG-10A	
Generator Make:	Cummins	
Generator Model:	C200D6D	
Engine Make:	Cummins	
Engine Model:	QSB7-G5	
Annual Hours of Operation:	8760	hr/yr
Requested Hours of Operation:	400	hr/yr
Generator Standby Rating:	200	kW
Engine Nameplate Horsepower:	324	hp
Maximum Fuel Flow:	27	gal/hr
Diesel Heat Value (AP-42):	137,000	Btu/gal
Engine Heat Input:	3.70	MMBtu/hr
Fuel:	Diesel	

Criteria Pollutant and VOC Emissions

Pollutant	Diesel Emission Factor (g/hp-hr)	Potential Emissions (lb/hr)	Potential Emissions (lb/yr)	Potential Emissions (tpy)	Potential Emissions Based on Reduction in Hours (tpy)	Emission Factor Source
NOx[1]	2.85	2.04	17832.86	8.92	0.41	Manufacturer Specification Sheet
CO	0.70	0.50	4380.00	2.19	0.10	Manufacturer Specification Sheet
PM_{10}	0.08	0.057	500.57	0.25	0.011	Manufacturer Specification Sheet
$PM_{2.5}$	0.08	0.057	500.57	0.25	0.011	Manufacturer Specification Sheet
VOC[1]	0.15	0.11	938.57	0.47	0.021	Manufacturer Specification Sheet
Pollutant	**Diesel Emission Factor (lb/hp-hr)**	**Potential Emissions (lb/hr)**	**Potential Emissions (lb/yr)**	**Potential Emissions (tpy)**	**Potential Emissions (tpy)**	**Emission Factor Source**
SO_2[2]	2.05E-03	0.66	5818.39	2.91	0.13	AP-42, Table 3.3-1 (10/96)[2]

Notes:
[1] Based on California Air Resource Board (CARB) Guidance, NOx+ NMHC was assumed to be 95% NOx and 5% NMHC.
[2] Taken from AP-42 Section 3.3, Table 3.3-1 (applicable for diesel engines less than 600 hp). Emission factor is for SO_X - assumes that all SO_X is SO_2.

HAP Emissions

Pollutant	Diesel Emission Factor (lb/MMBtu)	Potential Emissions (lb/hr)	Potential Emissions (tpy)	Potential Emissions Based on Reduction in Hours (tpy)	Emission Factor Source
Benzene	9.33E-04	3.45E-03	0.015	6.90E-04	AP-42 Table 3.3-2
Toluene	4.09E-04	1.51E-03	0.0066	3.03E-04	AP-42 Table 3.3-2
Xylenes	2.85E-04	1.05E-03	0.0046	2.11E-04	AP-42 Table 3.3-2
1,3-Butadiene	3.91E-05	1.45E-04	0.00063	2.89E-05	AP-42 Table 3.3-2
Formaldehyde	1.18E-03	4.36E-03	0.019	8.73E-04	AP-42 Table 3.3-2
Acetaldehyde	7.67E-04	2.84E-03	0.012	5.67E-04	AP-42 Table 3.3-2
Acrolein	9.25E-05	3.42E-04	0.0015	6.84E-05	AP-42 Table 3.3-2
Naphthalene	8.48E-05	3.14E-04	0.0014	6.27E-05	AP-42 Table 3.3-2
Total	**3.79E-03**	**0.014**	**0.061**	**0.0028**	**-**

Exhaust Parameters		
Stack Height	10.00	ft
Exit Diameter	0.33	ft
Stack Area	0.087	ft^2
Exhaust Flow	1439.00	ft^3/min
Exhaust Flow	23.98	ft^3/s
Exit Velocity	274.83	ft/s
Temperature	954.00	°F

University of New Mexico Hospitals
2211 Lomas Blvd. NE Albuquerque, New Mexico

Unit: CT-1, CT-2, CT-3
Make: Marley
Model: NC8413UAN3
Description: Cooling Tower

Unit No.		CT-1	CT-2	CT-3	Notes
Circulation Rate, Q_{circ}	gpm	6723	6723	6723	Based on MFG Spec
Drift Rate, Q_{drift}	%	0.02	0.02	0.02	Default value from NMED guidance
Dissolved Solids, TDS[1]	ppm	282	282	282	Based on City of Albuquerque Water Report
PM_{10}[2]	lb/hr	0.17	0.17	0.17	
	tpy	0.73	0.73	0.73	
$PM_{2.5}$[2]	lb/hr	0.00098	0.00098	0.00098	
	tpy	0.0043	0.0043	0.0043	

Notes:

[1] The cooling tower liquid analysis reports a TDS mass concentration of 282 ppm. To allow for operational flexibility, particle size multipliers for liquid with 1000 ppm TDS are conservatively referenced.

[2] Emissions were calculated using guidance provided in the NMED technical memorandum for "Calculating TSP, PM_{10}, and $PM_{2.5}$ from Cooling Towers" dated 9/9/2013.

Dd	Dp	Mass %
40	2.954922	0.514
150	11.08096	88.012
450	33.24287	99.071

Stack Parameters		
Diameter	11	ft
Height	81.0	ft
Flow	3995	ft^3/s
Stack Area	95.03	ft^2
Velocity	42.04	ft/s
Temperature	Ambient	F

University of New Mexico Hospitals
2211 Lomas Blvd. NE Albuquerque, New Mexico

Unit: CT-4, CT-5, CT-6
Description: Cooling Tower

Unit No.		CT-4	CT-5	CT-6	Notes
Circulation Rate, Q_{circ}	gpm	2400	2400	2400	Based on MFG Spec
Drift Rate, Q_{drift}	%	0.02	0.02	0.02	Default value from NMED guidance
Dissolved Solids, TDS[1]	ppm	282	282	282	Based on City of Albuquerque Water Report
PM_{10}[2]	lb/hr	0.060	0.060	0.060	
	tpy	0.26	0.26	0.26	
$PM_{2.5}$[2]	lb/hr	0.00035	0.00035	0.00035	
	tpy	0.0015	0.0015	0.0015	

Notes:

[1] The cooling tower liquid analysis reports a TDS mass concentration of 282 ppm. To allow for operational flexibility, particle size multipliers for liquid with 1000 ppm TDS are conservatively referenced.

[2] Emissions were calculated using guidance provided in the NMED technical memorandum for "Calculating TSP, PM_{10}, and $PM_{2.5}$ from Cooling Towers" dated 9/9/2013.

Dd	Dp	Mass %
40	2.954922	0.514
150	11.08096	88.012
450	33.24287	99.071

CT-4 Stack Parameters (2 Discharge Fans)		
Diameter	7.58	ft
Height	26.08	ft
Flow	1965	ft^3/s
Stack Area	45.17	ft^2
Velocity	43.51	ft/s
Temperature	Ambient	F

CT-5 Stack Parameters		
Diameter	11.00	ft
Height	36.83	ft
Flow	4280	ft^3/s
Stack Area	95.03	ft^2
Velocity	45.04	ft/s
Temperature	Ambient	F

CT-6 Stack Parameters (2 Discharge Fans)		
Diameter	7.58	ft
Height	24.58	ft
Flow	1965	ft^3/s
Stack Area	45.17	ft^2
Velocity	43.51	ft/s
Temperature	Ambient	F

2.5 Supporting Information

AP-42 Tables 1.4-1, 1.4-2, 1.4-3: External Combustion – Natural Gas

Emission Factor Documentation for AP-42 Section 1.4 Natural Gas Combustion

AP-42 Tables 1.3-1, 1.3-2, 1.3-3, 1.3-9: External Combustion – Fuel Oil

Zephyr Corporation (2014): PM Emission Factors: Past, Present and Future

Manufacturer Specifications for Riello RTC 6000 Boiler

Manufacturer Specifications for Hurst Boilers

Manufacturer Specifications for Cleaver Brooks Boiler

AP-42 Tables 3.4-1 and 3.4-3: Emission Factors for Gasoline and Diesel Industrial Engines

Tier II Emission Standards for Stationary CI RICE

Stack Test Report for UNMH-EG-1A

Generator Manufacturer Specifications

NMED Technical Memorandum: "Calculating TSP, PM10 and PM2.5 from Cooling Towers" (9/9/2013)

Cooling Tower Manufacturer Specifications

1.4 Natural Gas Combustion

1.4.1 General[1-2]

Natural gas is one of the major combustion fuels used throughout the country. It is mainly used to generate industrial and utility electric power, produce industrial process steam and heat, and heat residential and commercial space. Natural gas consists of a high percentage of methane (generally above 85 percent) and varying amounts of ethane, propane, butane, and inerts (typically nitrogen, carbon dioxide, and helium). The average gross heating value of natural gas is approximately 1,020 British thermal units per standard cubic foot (Btu/scf), usually varying from 950 to 1,050 Btu/scf.

1.4.2 Firing Practices[3-5]

There are three major types of boilers used for natural gas combustion in commercial, industrial, and utility applications: watertube, firetube, and cast iron. Watertube boilers are designed to pass water through the inside of heat transfer tubes while the outside of the tubes is heated by direct contact with the hot combustion gases and through radiant heat transfer. The watertube design is the most common in utility and large industrial boilers. Watertube boilers are used for a variety of applications, ranging from providing large amounts of process steam, to providing hot water or steam for space heating, to generating high-temperature, high-pressure steam for producing electricity. Furthermore, watertube boilers can be distinguished either as field erected units or packaged units.

Field erected boilers are boilers that are constructed on site and comprise the larger sized watertube boilers. Generally, boilers with heat input levels greater than 100 MMBtu/hr, are field erected. Field erected units usually have multiple burners and, given the customized nature of their construction, also have greater operational flexibility and NO_x control options. Field erected units can also be further categorized as wall-fired or tangential-fired. Wall-fired units are characterized by multiple individual burners located on a single wall or on opposing walls of the furnace while tangential units have several rows of air and fuel nozzles located in each of the four corners of the boiler.

Package units are constructed off-site and shipped to the location where they are needed. While the heat input levels of packaged units may range up to 250 MMBtu/hr, the physical size of these units are constrained by shipping considerations and generally have heat input levels less than 100 MMBtu/hr. Packaged units are always wall-fired units with one or more individual burners. Given the size limitations imposed on packaged boilers, they have limited operational flexibility and cannot feasibly incorporate some NO_x control options.

Firetube boilers are designed such that the hot combustion gases flow through tubes, which heat the water circulating outside of the tubes. These boilers are used primarily for space heating systems, industrial process steam, and portable power boilers. Firetube boilers are almost exclusively packaged units. The two major types of firetube units are Scotch Marine boilers and the older firebox boilers. In cast iron boilers, as in firetube boilers, the hot gases are contained inside the tubes and the water being heated circulates outside the tubes. However, the units are constructed of cast iron rather than steel. Virtually all cast iron boilers are constructed as package boilers. These boilers are used to produce either low-pressure steam or hot water, and are most commonly used in small commercial applications.

Natural gas is also combusted in residential boilers and furnaces. Residential boilers and furnaces generally resemble firetube boilers with flue gas traveling through several channels or tubes with water or air circulated outside the channels or tubes.

Table 1.4-1. EMISSION FACTORS FOR NITROGEN OXIDES (NO_x) AND CARBON MONOXIDE (CO) FROM NATURAL GAS COMBUSTION[a]

Combustor Type (MMBtu/hr Heat Input) [SCC]	NO_x[b]		CO	
	Emission Factor ($lb/10^6$ scf)	Emission Factor Rating	Emission Factor ($lb/10^6$ scf)	Emission Factor Rating
Large Wall-Fired Boilers (>100) [1-01-006-01, 1-02-006-01, 1-03-006-01]				
Uncontrolled (Pre-NSPS)[c]	280	A	84	B
Uncontrolled (Post-NSPS)[c]	190	A	84	B
Controlled - Low NO_x burners	140	A	84	B
Controlled - Flue gas recirculation	100	D	84	B
Small Boilers (<100) [1-01-006-02, 1-02-006-02, 1-03-006-02, 1-03-006-03]				
Uncontrolled	100	B	84	B
Controlled - Low NO_x burners	50	D	84	B
Controlled - Low NO_x burners/Flue gas recirculation	32	C	84	B
Tangential-Fired Boilers (All Sizes) [1-01-006-04]				
Uncontrolled	170	A	24	C
Controlled - Flue gas recirculation	76	D	98	D
Residential Furnaces (<0.3) [No SCC]				
Uncontrolled	94	B	40	B

[a] Reference 11. Units are in pounds of pollutant per million standard cubic feet of natural gas fired. To convert from $lb/10^6$ scf to $kg/10^6$ m^3, multiply by 16. Emission factors are based on an average natural gas higher heating value of 1,020 Btu/scf. To convert from $lb/10^6$ scf to lb/MMBtu, divide by 1,020. The emission factors in this table may be converted to other natural gas heating values by multiplying the given emission factor by the ratio of the specified heating value to this average heating value. SCC = Source Classification Code. ND = no data. NA = not applicable.

[b] Expressed as NO_2. For large and small wall fired boilers with SNCR control, apply a 24 percent reduction to the appropriate NO_X emission factor. For tangential-fired boilers with SNCR control, apply a 13 percent reduction to the appropriate NO_X emission factor.

[c] NSPS=New Source Performance Standard as defined in 40 CFR 60 Subparts D and Db. Post-NSPS units are boilers with greater than 250 MMBtu/hr of heat input that commenced construction modification, or reconstruction after August 17, 1971, and units with heat input capacities between 100 and 250 MMBtu/hr that commenced construction modification, or reconstruction after June 19, 1984.

TABLE 1.4-2. EMISSION FACTORS FOR CRITERIA POLLUTANTS AND GREENHOUSE GASES FROM NATURAL GAS COMBUSTION[a]

Pollutant	Emission Factor ($lb/10^6$ scf)	Emission Factor Rating
CO_2[b]	120,000	A
Lead	0.0005	D
N_2O (Uncontrolled)	2.2	E
N_2O (Controlled-low-NO_X burner)	0.64	E
PM (Total)[c]	7.6	D
PM (Condensable)[c]	5.7	D
PM (Filterable)[c]	1.9	B
SO_2[d]	0.6	A
TOC	11	B
Methane	2.3	B
VOC	5.5	C

[a] Reference 11. Units are in pounds of pollutant per million standard cubic feet of natural gas fired. Data are for all natural gas combustion sources. To convert from $lb/10^6$ scf to $kg/10^6$ m^3, multiply by 16. To convert from $lb/10^6$ scf to 1b/MMBtu, divide by 1,020. The emission factors in this table may be converted to other natural gas heating values by multiplying the given emission factor by the ratio of the specified heating value to this average heating value. TOC = Total Organic Compounds. VOC = Volatile Organic Compounds.

[b] Based on approximately 100% conversion of fuel carbon to CO_2. $CO_2[lb/10^6 \text{ scf}] = (3.67)(CON)(C)(D)$, where CON = fractional conversion of fuel carbon to CO_2, C = carbon content of fuel by weight (0.76), and D = density of fuel, 4.2×10^4 $lb/10^6$ scf.

[c] All PM (total, condensible, and filterable) is assumed to be less than 1.0 micrometer in diameter. Therefore, the PM emission factors presented here may be used to estimate PM_{10}, $PM_{2.5}$ or PM_1 emissions. Total PM is the sum of the filterable PM and condensible PM. Condensible PM is the particulate matter collected using EPA Method 202 (or equivalent). Filterable PM is the particulate matter collected on, or prior to, the filter of an EPA Method 5 (or equivalent) sampling train.

[d] Based on 100% conversion of fuel sulfur to SO_2.
Assumes sulfur content is natural gas of 2,000 grains/10^6 scf. The SO_2 emission factor in this table can be converted to other natural gas sulfur contents by multiplying the SO_2 emission factor by the ratio of the site-specific sulfur content (grains/10^6 scf) to 2,000 grains/10^6 scf.

TABLE 1.4-3. EMISSION FACTORS FOR SPECIATED ORGANIC COMPOUNDS FROM NATURAL GAS COMBUSTION[a]

CAS No.	Pollutant	Emission Factor ($lb/10^6$ scf)	Emission Factor Rating
91-57-6	2-Methylnaphthalene[b, c]	2.4E-05	D
56-49-5	3-Methylcholanthrene[b, c]	<1.8E-06	E
	7,12-Dimethylbenz(a)anthracene[b,c]	<1.6E-05	E
83-32-9	Acenaphthene[b,c]	<1.8E-06	E
203-96-8	Acenaphthylene[b,c]	<1.8E-06	E
120-12-7	Anthracene[b,c]	<2.4E-06	E
56-55-3	Benz(a)anthracene[b,c]	<1.8E-06	E
71-43-2	Benzene[b]	2.1E-03	B
50-32-8	Benzo(a)pyrene[b,c]	<1.2E-06	E
205-99-2	Benzo(b)fluoranthene[b,c]	<1.8E-06	E
191-24-2	Benzo(g,h,i)perylene[b,c]	<1.2E-06	E
207-08-9	Benzo(k)fluoranthene[b,c]	<1.8E-06	E
106-97-8	Butane	2.1E+00	E
218-01-9	Chrysene[b,c]	<1.8E-06	E
53-70-3	Dibenzo(a,h)anthracene[b,c]	<1.2E-06	E
25321-22-6	Dichlorobenzene[b]	1.2E-03	E
74-84-0	Ethane	3.1E+00	E
206-44-0	Fluoranthene[b,c]	3.0E-06	E
86-73-7	Fluorene[b,c]	2.8E-06	E
50-00-0	Formaldehyde[b]	7.5E-02	B
110-54-3	Hexane[b]	1.8E+00	E
193-39-5	Indeno(1,2,3-cd)pyrene[b,c]	<1.8E-06	E
91-20-3	Naphthalene[b]	6.1E-04	E
109-66-0	Pentane	2.6E+00	E
85-01-8	Phenanathrene[b,c]	1.7E-05	D
74-98-6	Propane	1.6E+00	E

TABLE 1.4-3. EMISSION FACTORS FOR SPECIATED ORGANIC COMPOUNDS FROM NATURAL GAS COMBUSTION (Continued)

CAS No.	Pollutant	Emission Factor ($lb/10^6$ scf)	Emission Factor Rating
129-00-0	Pyrene[b, c]	5.0E-06	E
108-88-3	Toluene[b]	3.4E-03	C

[a] Reference 11. Units are in pounds of pollutant per million standard cubic feet of natural gas fired. Data are for all natural gas combustion sources. To convert from $lb/10^6$ scf to $kg/10^6$ m^3, multiply by 16. To convert from $1b/10^6$ scf to lb/MMBtu, divide by 1,020. Emission Factors preceeded with a less-than symbol are based on method detection limits.

[b] Hazardous Air Pollutant (HAP) as defined by Section 112(b) of the Clean Air Act.

[c] HAP because it is Polycyclic Organic Matter (POM). POM is a HAP as defined by Section 112(b) of the Clean Air Act.

[d] The sum of individual organic compounds may exceed the VOC and TOC emission factors due to differences in test methods and the availability of test data for each pollutant.

EMISSION FACTOR DOCUMENTATION FOR AP-42 SECTION 1.4 NATURAL GAS COMBUSTION

Prepared for:

Office of Air Quality Planning and Standards
U.S. Environmental Protection Agency
Research Triangle Park, NC

Prepared by:

Eastern Research Group
1600 Perimeter Park
Morrisville, NC 27560

March 1998

3.0 AP-42 Section Development

3.1 Revisions to Section Narrative

The technical discussion in AP-42 Section 1.4 did not need major revisions because no significant technological changes in this source category were identified since the last publication. Some of the discussion on NO_x and PM formation was revised to better describe emissions from this source category.

3.2 Pollutant Emission Factor Development

3.2.1 Database Design

The emission data assembled for the development of natural gas combustion emission factors were stored in a database except for the data received from ARD. A database approach was chosen to easily access and manipulate the large amount of data collected for this section and to facilitate data transfer within other concurrent projects at EPA. The design of this database was accomplished in conjunction with the Industrial Combustion Coordinated Rulemaking (ICCR) effort ongoing within the Emission Standards Division (ESD). Data entered under either of these projects were easily transferred between databases. Furthermore, the common design of the database will allow for future additions to the database and simple recalculation of emission factors.

Within the database, data were stored in two tables to reduce repetitive entry of data. These tables, and the data fields associated with each table are as follows:

Facilities Table

- Facility name
- Location
- Testing Company
- Date of Test
- Boiler Manufacturer
- Boiler Type (wall-fired, tangential-fired, etc.)
- Air Supply (forced draft, induced draft, balanced draft etc.)
- Capacity (MW)
- Load (percent of capacity)
- Fuel Type
- Fuel Higher Heating Value
- Heat Input (MMBtu/hr)
- Post-combustion Emission Controls
- Application (electrical generation, process steam, etc.)

Test Data Table

- Pollutant
- Test Method
- Pollutant Concentration (as reported)
- Detection Limit

- Exhaust Oxygen Percentage
- Data Rating
- Fuel Exhaust Factor (F-Factor)
- Exhaust Flow Rate
- Fuel Flow Rate
- Exhaust Moisture Fraction
- Molecular Weight of Pollutant

The database was programmed to merge the data in the two tables and calculate emission factors for the available pollutants in units of pounds of pollutant per million standard cubic feet of fuel burned. To ensure consistent calculation of emission factors, the database was programmed to use the emission concentration data and process data taken during the testing period to calculate the emission factors. Emission factors provided in test reports were not used. The EPA concluded that this method of calculation would provide the highest quality emission factors. This method of calculating emission factors was chosen because different methods of calculation emission factors were used in some of the references and in some cases, the method of calculating emission factors was not given. Equations used to calculate emission factors for this section were dependent on the pollutant concentration units.

The following equations were used to convert concentration data to the selected emission factors used in this section.

For concentration in parts per million by volume - dry (ppmvd), the following equation was used:

$$EF_{scf} = \frac{(C_{ppmvd} * F * 1{,}020 * MW)}{(10^6 * 385.5)} * \text{temperature correction} * \text{oxygen correction}$$

For concentration in parts per million by volume - wet (ppmvw), the following equation was used:

$$EF_{scf} = \frac{(C_{ppmvw} * F * 1{,}020 * MW)}{(10^6 * 385.5) * (1 - W_c)} * \text{temperature correction} * \text{oxygen correction}$$

For concentration in micrograms per dry standard cubic feet, the following equation was used:

$$EF_{scf} = \frac{(C_{\mu gf} * F * 1{,}020)}{(10^6 * 453.6)} * \text{oxygen correction}$$

For concentration in parts per billion by volume - dry, the following equation was used:

$$EF_{scf} = \frac{(C_{ppbvd} * F * 1{,}020 * MW)}{(10^9 * 385.5)} * \text{temperature correction} * \text{oxygen correction}$$

For concentration in volume percent, the following equation was used:

$$EF_{scf} = \frac{(C_{\%} * F * 1{,}020 * MW)}{(100 * 385.5)} * \text{temperature correction} * \text{oxygen correction}$$

For concentration in nanograms per dry standard cubic feet, the following equation was used:

$$EF_{scf} = \frac{(C_{ngf} * F * 1{,}020)}{(10^9 * 453.6)} * \text{oxygen correction}$$

For concentration in grains/dscf, the following equation was used:

$$EF_{scf} = (C_{grf} * F * 1{,}020 * 1.43 * 10^{-4}) * \text{oxygen correction}$$

For concentration in micrograms per dry standard cubic meter, the following equation was used:

$$EF_{scf} = \frac{(C_{\mu gm} * F * 1{,}020)}{(10^6 * 453.6 * 35.31)} * \text{oxygen correction}$$

Where:

Ef_{scf}	=	Emission factor (pounds per million standard cubic feet of fuel input)
C_{ppmvd}	=	Concentration (parts per million by volume, dry)
C_{ppmvw}	=	Concentration (parts per million by volume, wet)
$C_{\mu gf}$	=	Concentration (micrograms per dry standard cubic foot)
C_{ppbvd}	=	Concentration (parts per billion by volume, dry)
$C_{\%}$	=	Concentration (percent by volume)
C_{ngf}	=	Concentration (nanograms per dry standard cubic foot)
C_{grf}	=	Concentration (grains per dry standard cubic foot)
$C_{\mu gm}$	=	Concentration (micrograms per dry standard cubic meter)
F	=	F-Factor (dry standard cubic feet per million Btu)
MW	=	Molecular weight (pounds per pound-mole)
T_{std}	=	Reference temperature of F-Factor

$\%O_2$	=	Percent of oxygen in exhaust, by volume
1,020	=	Natural gas heating value (MMBtu per 10^6 scf)
385.5	=	Volume occupied by 1 lb-mole of gas at 68°F (standard cubic feet per lb-mole)
60	=	Conversion factor (minutes per hour)
W_c	=	Water volume fraction in exhaust
453.6	=	Conversion factor (grams per pound)
$1.43*10^{-4}$	=	Conversion factor (pounds per grain)
35.31	=	Conversion factor (dry standard cubic feet per dry standard cubic meter)

$$\text{Temperature correction for F-Factor (to 68°F)} = \left(\frac{528°R}{460°R_t + T_{std}\ °F} \right)$$

$$\text{Oxygen correction (to 0\% } O_2\text{)} = \left(\frac{20.9}{20.9 - \%O_2} \right)$$

Detection Limits

Test results from several tests of trace organic and metallic compounds reported concentrations below the method detection limits. If a detection limit was provided in the test report, EPA used that information in the development of AP-42 emission factors. To effectively use this data, two methods were employed. For cases where a portion of the test data for a specific pollutant were below the method detection limit but other test data report detection of that compound, then one-half of the detection limit was averaged with the detected concentrations to calculate of the emission factor for that pollutant. In cases where all of the test data for a specific pollutant reported concentrations below the method detection limit, the lowest detection limit was reported for the emission factor for that pollutant, and that factor noted as a detection limit. If an emission factor for an individual boiler was developed from a detection limit and the resulting emission factor was higher than the emission factors generated from detected concentrations, the emission factor based on a detection limit was removed from the average. The goal of this decision was to prevent an unusually high detection limit from artificially increasing an average emission factor. These methods for addressing detection level issues were provided in the Procedures For Preparing Emission Factor Documents.[1]

Calculation of Average Emission Factors

To provide average emission factors for these sources, the arithmatic average of the emission factors from all tests on a specific source type was calculated in the database. For tests that consisted of multiple runs, the arithmetic average of the runs was used to develop the emission factor of that test. Individual tests were given equal weight in the calculation of average emission factors for each boiler group. In the case of NO_x data received from ARD, the quarterly average from each boiler was treated like an individual test.

1.3 Fuel Oil Combustion

1.3.1 General[1-3]

Two major categories of fuel oil are burned by combustion sources: distillate oils and residual oils. These oils are further distinguished by grade numbers, with Nos. 1 and 2 being distillate oils; Nos. 5 and 6 being residual oils; and No. 4 being either distillate oil or a mixture of distillate and residual oils. No. 6 fuel oil is sometimes referred to as Bunker C. Distillate oils are more volatile and less viscous than residual oils. They have negligible nitrogen and ash contents and usually contain less than 0.3 percent sulfur (by weight). Distillate oils are used mainly in domestic and small commercial applications, and include kerosene and diesel fuels. Being more viscous and less volatile than distillate oils, the heavier residual oils (Nos. 5 and 6) may need to be heated for ease of handling and to facilitate proper atomization. Because residual oils are produced from the residue remaining after the lighter fractions (gasoline, kerosene, and distillate oils) have been removed from the crude oil, they contain significant quantities of ash, nitrogen, and sulfur. Residual oils are used mainly in utility, industrial, and large commercial applications.

1.3.2 Firing Practices[4]

The major boiler configurations for fuel oil-fired combustors are watertube, firetube, cast iron, and tubeless design. Boilers are classified according to design and orientation of heat transfer surfaces, burner configuration, and size. These factors can all strongly influence emissions as well as the potential for controlling emissions.

Watertube boilers are used in a variety of applications ranging from supplying large amounts of process steam to providing space heat for industrial facilities. In a watertube boiler, combustion heat is transferred to water flowing through tubes which line the furnace walls and boiler passes. The tube surfaces in the furnace (which houses the burner flame) absorb heat primarily by radiation from the flames. The tube surfaces in the boiler passes (adjacent to the primary furnace) absorb heat primarily by convective heat transfer.

Firetube boilers are used primarily for heating systems, industrial process steam generators, and portable power boilers. In firetube boilers, the hot combustion gases flow through the tubes while the water being heated circulates outside of the tubes. At high pressures and when subjected to large variations in steam demand, firetube units are more susceptible to structural failure than watertube boilers. This is because the high-pressure steam in firetube units is contained by the boiler walls rather than by multiple small-diameter watertubes, which are inherently stronger. As a consequence, firetube boilers are typically small and are used primarily where boiler loads are relatively constant. Nearly all firetube boilers are sold as packaged units because of their relatively small size.

A cast iron boiler is one in which combustion gases rise through a vertical heat exchanger and out through an exhaust duct. Water in the heat exchanger tubes is heated as it moves upward through the tubes. Cast iron boilers produce low pressure steam or hot water, and generally burn oil or natural gas. They are used primarily in the residential and commercial sectors.

Another type of heat transfer configuration used on smaller boilers is the tubeless design. This design incorporates nested pressure vessels with water in between the shells. Combustion gases are fired into the inner pressure vessel and are then sometimes recirculated outside the second vessel.

Table 1.3-1. CRITERIA POLLUTANT EMISSION FACTORS FOR FUEL OIL COMBUSTION[a]

Firing Configuration (SCC)[a]	SO_2[b]		SO_3[c]		NO_x[d]		CO[e]		Filterable PM[f]	
	Emission Factor (lb/10^3 gal)	EMISSION FACTOR RATING	Emission Factor (lb/10^3 gal)	EMISSION FACTOR RATING	Emission Factor (lb/10^3 gal)	EMISSION FACTOR RATING	Emission Factor (lb/10^3 gal)	EMISSION FACTOR RATING	Emission Factor (lb/10^3 gal)	EMISSION FACTOR RATING
Boilers > 100 Million Btu/hr										
No. 6 oil fired, normal firing (1-01-004-01), (1-02-004-01), (1-03-004-01)	157S	A	5.7S	C	47	A	5	A	9.19(S)+3.22	A
No. 6 oil fired, normal firing, low NO_x burner (1-01-004-01), (1-02-004-01)	157S	A	5.7S	C	40	B	5	A	9.19(S)+3.22	A
No. 6 oil fired, tangential firing, (1-01-004-04)	157S	A	5.7S	C	32	A	5	A	9.19(S)+3.22	A
No. 6 oil fired, tangential firing, low NO_x burner (1-01-004-04)	157S	A	5.7S	C	26	E	5	A	9.19(S)+3.22	A
No. 5 oil fired, normal firing (1-01-004-05), (1-02-004-04)	157S	A	5.7S	C	47	B	5	A	10	B
No. 5 oil fired, tangential firing (1-01-004-06)	157S	A	5.7S	C	32	B	5	A	10	B
No. 4 oil fired, normal firing (1-01-005-04), (1-02-005-04)	150S	A	5.7S	C	47	B	5	A	7	B
No. 4 oil fired, tangential firing (1-01-005-05)	150S	A	5.7S	C	32	B	5	A	7	B
No. 2 oil fired (1-01-005-01), (1-02-005-01), (1-03-005-01)	142S[h]	A	5.7S	C	24	D	5	A	2	A
No.2 oil fired, LNB/FGR, (1-01-005-01), (1-02-005-01), (1-03-005-01)	142S[h]	A	5.7S	A	10	D	5	A	2	A

Table 1.3-1. (cont.)

Firing Configuration (SCC)[a]	SO_2[b]		SO_3[c]		NO_x[d]		CO[e]		Filterable PM[f]	
	Emission Factor ($lb/10^3$ gal)	EMISSION FACTOR RATING	Emission Factor ($lb/10^3$ gal)	EMISSION FACTOR RATING	Emission Factor ($lb/10^3$ gal)	EMISSION FACTOR RATING	Emission Factor ($lb/10^3$ gal)	EMISSION FACTOR RATING	Emission Factor ($lb/10^3$ gal)	EMISSION FACTOR RATING
Boilers < 100 Million Btu/hr										
No. 6 oil fired (1-02-004-02/03) (1-03-004-02/03)	157S	A	2S	A	55	A	5	A	9.19(S)+3.22[i]	B
No. 5 oil fired (1-03-004-04)	157S	A	2S	A	55	A	5	A	10[i]	A
No. 4 oil fired (1-03-005-04)	150S	A	2S	A	20	A	5	A	7	B
Distillate oil fired (1-02-005-02/03) (1-03-005-02/03)	142S	A	2S	A	20	A	5	A	2	A
Residential furnace (A2104004/A2104011)	142S	A	2S	A	18	A	5	A	0.4[g]	B

a To convert from lb/103 gal to kg/103 L, multiply by 0.120. SCC = Source Classification Code.
b References 1-2,6-9,14,56-60. S indicates that the weight % of sulfur in the oil should be multiplied by the value given. For example, if the fuel is 1% sulfur, then S = 1.
c References 1-2,6-8,16,57-60. S indicates that the weight % of sulfur in the oil should be multiplied by the value given. For example, if the fuel is 1% sulfur, then S = 1.
d References 6-7,15,19,22,56-62. Expressed as NO2. Test results indicate that at least 95% by weight of NOx is NO for all boiler types except residential furnaces, where about 75% is NO. For utility vertical fired boilers use 105 lb/103 gal at full load and normal (>15%) excess air. Nitrogen oxides emissions from residual oil combustion in industrial and commercial boilers are related to fuel nitrogen content, estimated by the following empirical relationship: lb NO2 /103 gal = 20.54 + 104.39(N), where N is the weight % of nitrogen in the oil. For example, if the fuel is 1% nitrogen, then N = 1.
e References 6-8,14,17-19,56-61. CO emissions may increase by factors of 10 to 100 if the unit is improperly operated or not well maintained.
f References 6-8,10,13-15,56-60,62-63. Filterable PM is that particulate collected on or prior to the filter of an EPA Method 5 (or equivalent) sampling train. Particulate emission factors for residual oil combustion are, on average, a function of fuel oil sulfur content where S is the weight % of sulfur in oil. For example, if fuel oil is 1% sulfur, then S = 1.
g Based on data from new burner designs. Pre-1970's burner designs may emit filterable PM as high as 3.0 1b/103 gal.
h The SO2 emission factor for both no. 2 oil fired and for no. 2 oil fired with LNB/FGR, is 142S, not 157S. Errata dated April 28, 2000. Section corrected May 2010.
i The PM factors for No.6 and No. 5 fuel were reversed. Errata dated April 28, 2000. Section corrected May 2010.

Table 1.3-2. CONDENSABLE PARTICULATE MATTER EMISSION FACTORS FOR OIL COMBUSTION[a]

Firing Configuration[b] (SCC)	Controls	CPM - TOT[c, d]		CPM - IOR[c, d]		CPM - ORG[c, d]	
		Emission Factor (lb/10^3 gal)	EMISSION FACTOR RATING	Emission Factor (lb/10^3 gal)	EMISSION FACTOR RATING	Emission Factor (lb/10^3 gal)	EMISSION FACTOR RATING
No. 2 oil fired (1-01-005-01, 1-02-005-01, 1-03-005-01)	All controls, or uncontrolled	1.3[d, e]	D	65% of CPM-TOT emission factor[c]	D	35% of CPM-TOT emission factor[c]	D
No. 6 oil fired (1-01-004-01/04, 1-02-004-01, 1-03-004-01)	All controls, or uncontrolled	1.5[f]	D	85% of CPM-TOT emission factor[d]	E	15% of CPM-TOT emission factor[d]	E

[a] All condensable PM is assumed to be less than 1.0 micron in diameter.
[b] No data are available for numbers 3, 4, and 5 oil. For number 3 oil, use the factors provided for number 2 oil. For numbers 4 and 5 oil, use the factors provided for number 6 oil.
[c] CPM-TOT = total condensable particulate matter.
CPM-IOR = inorganic condensable particulate matter.
CPM-ORG = organic condensable particulate matter.
[d] To convert to lb/MMBtu of No. 2 oil, divide by 140 MMBtu/10^3 gal. To convert to lb/MMBtu of No. 6 oil, divide by 150 MMBtu/10^3 gal.
[e] References: 76-78.
[f] References: 79-82.

Table 1.3-3. EMISSION FACTORS FOR TOTAL ORGANIC COMPOUNDS (TOC), METHANE, AND NONMETHANE TOC (NMTOC) FROM UNCONTROLLED FUEL OIL COMBUSTION[a]

EMISSION FACTOR RATING: A

Firing Configuration (SCC)	TOC[b] Emission Factor ($lb/10^3$ gal)	Methane[b] Emission Factor ($lb/10^3$ gal)	NMTOC[b] Emission Factor ($lb/10^3$ gal)
Utility boilers			
No. 6 oil fired, normal firing (1-01-004-01)	1.04	0.28	0.76
No. 6 oil fired, tangential firing (1-01-004-04)	1.04	0.28	0.76
No. 5 oil fired, normal firing (1-01-004-05)	1.04	0.28	0.76
No. 5 oil fired, tangential firing (1-01-004-06)	1.04	0.28	0.76
No. 4 oil fired, normal firing (1-01-005-04)	1.04	0.28	0.76
No. 4 oil fired, tangential firing (1-01-005-05)	1.04	0.28	0.76
Industrial boilers			
No. 6 oil fired (1-02-004-01/02/03)	1.28	1.00	0.28
No. 5 oil fired (1-02-004-04)	1.28	1.00	0.28
Distillate oil fired (1-02-005-01/02/03)	0.252	0.052	0.2
No. 4 oil fired (1-02-005-04)	0.252	0.052	0.2
Commercial/institutional/residential combustors			
No. 6 oil fired (1-03-004-01/02/03)	1.605	0.475	1.13
No. 5 oil fired (1-03-004-04)	1.605	0.475	1.13
Distillate oil fired (1-03-005-01/02/03)	0.556	0.216	0.34
No. 4 oil fired (1-03-005-04)	0.556	0.216	0.34
Residential furnace (A2104004/A2104011)	2.493	1.78	0.713

a To convert from lb/103 gal to kg/103 L, multiply by 0.12. SCC = Source Classification Code.

b References 29-32. Volatile organic compound emissions can increase by several orders of magnitude if the boiler is improperly operated or is not well maintained.

Table 1.3-9. EMISSION FACTORS FOR SPECIATED ORGANIC COMPOUNDS FROM FUEL OIL COMBUSTION[a]

Organic Compound	Average Emission Factor[b] ($lb/10^3$ Gal)	EMISSION FACTOR RATING
Benzene	2.14E-04	C
Ethylbenzene	6.36E-05[c]	E
Formaldehyde[d]	3.30E-02	C
Naphthalene	1.13E-03	C
1,1,1-Trichloroethane	2.36E-04[c]	E
Toluene	6.20E-03	D
o-Xylene	1.09E-04[c]	E
Acenaphthene	2.11E-05	C
Acenaphthylene	2.53E-07	D
Anthracene	1.22E-06	C
Benz(a)anthracene	4.01E-06	C
Benzo(b,k)fluoranthene	1.48E-06	C
Benzo(g,h,i)perylene	2.26E-06	C
Chrysene	2.38E-06	C
Dibenzo(a,h) anthracene	1.67E-06	D
Fluoranthene	4.84E-06	C
Fluorene	4.47E-06	C
Indo(1,2,3-cd)pyrene	2.14E-06	C
Phenanthrene	1.05E-05	C
Pyrene	4.25E-06	C
OCDD	3.10E-09[c]	E

[a] Data are for residual oil fired boilers, Source Classification Codes (SCCs) 1-01-004-01/04.
[b] References 64-72. To convert from $lb/10^3$ gal to $kg/10^3$ L, multiply by 0.12.
[c] Based on data from one source test (Reference 67).
[d] The formaldehyde number presented here is based only on data from utilities using No. 6 oil. The number presented in Table 1.3-7 is based on utility, commercial, and industrial boilers.

PM Emission Factors: Past, Present and Future

Karen Olson and Louis Corio, Zephyr Environmental Corporation

Introduction

Over the last fifteen years, the regulatory requirements for particulate matter (PM) species (PM_{10} and $PM_{2.5}$) have become increasingly more rigorous. At the same time our technical understanding of PM emission species and measurement in the stack has grown significantly. However, the published PM emission factors for gas-fired combustion sources found in U.S. EPA's AP-42, established in the late-1990s, have not been revised or "upgraded" since that time to reflect our increased understanding of PM emissions and measurement.

Use of AP-42 emission factors for combustion units firing "inherently clean" natural gas overestimate emissions and often result in unnecessary complications in demonstrating compliance with the current $PM_{2.5}$ NAAQS, permitting and compliance assessments EPA's recently-released $PM_{2.5}$ modeling guidance[1] will require additional levels of detail and accuracy in characterizing emissions from combustion sources for permitting/compliance assessment purposes. As a result, a recent trend has been for both governmental agencies and permit applicants to use alternate PM emission factors in their regulatory analyses, with the "blessing" of EPA and state regulators.

This paper summarizes the results (for gas-fired combustion units) from a $PM_{2.5}$ emission measurement research program, discusses how these results have been successfully used to support development and application of alternate PM emission factors, identifies areas of need for additional $PM_{2.5}$ emission measurement data, and suggests recommended next steps.

[1] *Draft Guidance for $PM_{2.5}$ Permit Modeling*, Memorandum from Stephen D. Page, Office of Air Quality Planning and Standards, U.S. EPA, Research Triangle Park, NC, March 2013

Background

Background: PM Emission Testing/Measurement

In general, PM emissions from fossil fuel combustion are typically composed of two components – filterable PM and condensable PM. A demonstration of compliance with PM_{10} and/or $PM_{2.5}$ emission limits requires the use of EPA-approved in-stack test methods to measure the filterable and condensable PM components.

PM that is captured in-stack on the filter of an emission test train is referred to as the filterable component of primary PM emissions (filterable PM). Solid or liquid particles that condense from gaseous emissions within seconds of exiting a stack (i.e., at ambient conditions) are referred to as the condensable component of primary PM emissions (condensable PM). All condensable PM, if emitted by a source, is in the $PM_{2.5}$ size fraction; therefore, all condensable PM is a component of both primary $PM_{2.5}$ and primary PM_{10} emissions. Total PM is defined as the sum of the filterable and condensable PM components, and is expressed as follows for the different size fractions:

$$\text{Total } PM_{2.5} = \text{Filterable } PM_{2.5} + \text{Condensable PM}$$

$$\text{Total } PM_{10} = \text{Filterable } PM_{10} + \text{Condensable PM}$$

Condensable PM is typically the predominant emissions component for gas-fired combustion sources.

The evolution of the form of the PM NAAQS over the years, especially as it relates to size fractions, has required that EPA periodically update and revise its reference test methods (TMs) to provide representative measurements of stack emissions. A brief history of the evolution of the PM TMs is provided in the appendix to this paper. The accuracy of measured emission rates needed for compliance assessment is highly dependent on the adequacy of these TMs.

As described below, even with the updated TMs, the measurement of condensable PM emissions has historically continued to be a bit more problematic than the measurement of filterable PM emissions. This is evidenced by the April 8, 2014 EPA memo providing interim guidance on revised sample quality control methods for the condensable particulate matter testing[2].

Despite the periodic improvements in the measurement methods, the fact still remains that the EPA test methods were not designed for the level of detection needed for gas-fired combustion units. The newest combustion units on today's market are extremely efficient and emit minimal concentrations of PM when firing gas. As shown later in this paper for gas-fired units, research conducted using the dilution sampling (DS) method indicated that $PM_{2.5}$ emissions are extremely low – probably near ambient air background concentrations of $PM_{2.5}$ in many cases. These levels, which are well below both the estimated minimum detection limit (MDL) of the EPA TMs, are difficult to quantify with high

[2] *Interim Guidance on the Treatment of Condensable Particulate Matter Test Results in the Prevention of Significant Deterioration and Nonattainment New Source Review Permitting Programs*, Memorandum from Stephen D. Page, Director, Office of Air Quality Planning and Standards (C404-04), to EPA Regional Air Division Directors, Regions 1-10, April 8, 2014, Research Triangle Park, NC.

confidence.[3] With such low PM levels, any foreign matter (e.g., residue on improperly cleaned glassware used to collect/store samples) that is inadvertently included in the analysis can significantly bias the results high.

Note that uncertainty in the EPA test method results can be reduced by extending the sampling time period from the standard one-hour run to a multiple-hour run. (The EPA PM test method requires three one-hour sampling runs.) The extended sampling run times (beyond the EPA requirement) allow for the collection of more mass during the test run. And, as acknowledged by EPA, collecting sufficient weighable mass is important for the methods to be precise (75 FR 80118).

Background: AP-42 Emission Factor

EPA's AP-42 document provides guidance to the regulated community and regulators to estimate emissions when other more representative data are not available. EPA characterizes the quality of emission factors based on the following two factors:

1. the quality of test data the factor is based on, and
2. whether the emission factor can be expected to be representative of the typical emission source.

The EPA assessment of an emission factor is typically identified with the emission factor in AP-42 by an assigned quality rating. Per EPA, an "A" rated emission factor is the best available emission factor. As the factor ratings drop to as low as an "E" rating, the reliability of the emission factor is considered a poorer quality.

AP-42 emission factors have historically been relied upon to estimate PM emissions (filterable and condensable components) from different types of gas-fired combustion units. The AP-42 emission factors were developed using the results from older versions of EPA test methods (Methods 5 or 201 for filterable PM and Method 202 for condensable PM).

The AP-42 emission factor ratings for PM emissions from gas-fired combustion sources are as follows:

- Section 1.4, External Combustion Sources – Natural Gas Combustion (last updated in 1998):
    - The filterable PM emission factor has a "B" rating;
    - The condensable PM emission factor for external combustion sources was based on only four tests and has a "D" rating (below average quality); and
    - The total PM emission factor rate has a "D" rating (i.e., "below average").

- Section 3.1, Stationary Internal Combustion Sources – Stationary Gas Turbines (last updated in April 2000):

[3] England, G.C., "Development of Fine Particulate Emission Factors and Speciation Profiles for Oil and Gas-Fired Combustion Systems, Final Report," 2004.

- The PM emission factors were based on only three tests conducted in the mid-1990s at one facility; and
- The filterable, condensable, and total PM emission factors all have a "C" rating (i.e., "average").

This information shows that the quality of the AP-42 PM emission factors is considered below average or average based on a pre-2000 assessment. Of course, based on our current understanding of the older test method inadequacies which bias test results high, a current assessment would be expected to result in an even lower rating of the existing AP-42 factors. As a result, the AP-42 emission factors for PM can generally be expected to yield unrepresentatively high emission estimates for a specific gas-fired unit, especially as it relates to condensable PM emissions. For reference, the emission factors given in AP-42 for external combustion units and combustion turbines are shown in Table 1 below.

Table 1. AP-42 PM Emission Factors[4]

Source Type	Filterable PM (lb/MMBtu)	Condensable PM (lb/MMBtu)	Total PM (lb/MMBtu)
External Combustion Units	0.0019[a]	0.0056[a]	0.0075[a]
Combustion Turbines	0.0019	0.0047	0.0066

[a] Based on a natural gas heat content of 1,020 Btu/ft^3

Background: More Recent and Accurate PM Emission Testing and Emission Factors

Over the period of 2000-2004, a comprehensive PM test method research program was conducted to characterize PM (in particular $PM_{2.5}$) for a variety of common oil-fired or gas-fired combustion sources. This test program was co-sponsored by the U.S. Department of Energy (DOE), GE Energy and Environmental Research Corporation (GE EERC), and a number of state agencies and industry trade groups. The data gathered in that test program provide more accurate information about the $PM_{2.5}$ formed by gas (natural gas and refinery fuel gas) and oil combustion, and how to more appropriately measure such emissions in the stack. The following discussion provides a summary of that test program and the relevant resulting data which can be relied upon to improve PM_{10} and $PM_{2.5}$ emission estimates for external and internal combustion sources.

A comprehensive PM test method evaluation program, co-sponsored by the New York State Energy Research and Development Authority (NYSERDA), the U.S. DOE, the California Energy Commission, GE EERC, Gas Research Institute, and American Petroleum Institute (API), yielded significant findings regarding the representativeness of PM test methods and emission factors. This program was conducted between 2000 and 2004 under the technical management of Glenn C. England of GE EERC. The focus of the testing program was the assessment of the performance of the DS method

[4] *Compilation of Air Pollutant Emission Factors, Volume I: Stationary Point and Area Sources, AP-42,* Fifth Ed., U.S. EPA, Research Triangle Park, NC, January 1995 (July 1998 updates for gas-fired external combustion sources and April 2000 updates for stationary combustion turbines)

and the EPA TMs. The DS method results were used to characterize emission rates and chemical speciation profiles for $PM_{2.5}$ and gaseous precursors for a variety of common oil- and gas-fired combustion sources. This research culminated in the publication of a series of technical, topical reports in 2004 entitled: *Development of Fine Particulate Emission Factors and Speciation Profiles for Oil- and Gas-Fired Combustion Systems.* These reports included the results of testing studies conducted separately by the API for external combustion units ("NYSERDA/API studies").

Versions of the DS method have been used for more than 40 years to collect emission samples from various source types. It was adopted as the regulatory standard method for determination of PM emissions from mobile sources, including heavy-duty diesel engines. Dilution sampling typically involves extracting a sample from the stack or flue, diluting it with purified ambient air or pure compressed gases, and then obtaining samples with ambient air collection and analysis methods. Because the sample is cooled to ambient temperatures, aerosol formation conditions approximately simulate those in actual exhaust plumes and test results are therefore more directly comparable to ambient air measurement results than are those from standard EPA test methods (e.g., EPA TM 5 and TM 202).

In general, the DS method test results from the NYSERDA/API studies indicated that substantially all of the PM in the stack was smaller than 2.5 micrometers; these results were generally well below the MDL of the EPA method. The in-stack $PM_{2.5}$ MDL achieved with the DS method are far lower than can be achieved by traditional EPA test methods due to avoidance of biases and greater analytical sensitivity; therefore, the DS method can detect and report the actual emissions, showing that they are far lower than the total PM measured by the traditional EPA methods.

The NYSERDA/API studies results for natural gas-fired boilers and heaters (external combustion units) and turbines (internal combustion units) are summarized in Table 2. The NYSERDA/API studies results for refinery fuel gas-fired external and internal combustion units (which are expected to have more sulfur-based emissions than natural gas-fired units) are summarized in Table 3. Clearly these data provide support for the expectation that actual PM emissions from natural gas and fuel gas (with sulfur) combustion can be expected to be well below that estimated with AP-42 emission factors.

The duration of each test run for all test methods was six hours to help ensure the collection of sufficient PM mass to allow a more precise analysis.

A comparison of the total $PM_{2.5}$ emission rates between external combustion units in Tables 2 and 3 shows that, on average, although the DS method results are similar for both natural gas- and refinery fuel gas-fired units, the EPA TM indicates that the total $PM_{2.5}$ emission rate for refinery fuel gas-fired units is approximately six times higher than that for natural gas-fired units. This difference is most likely due the higher sulfur content of the refinery fuel gas, which led to PM artifact formation due to SO_2 conversion to sulfates in the TM 202 impinger solution. Also, note that the maximum $PM_{2.5}$ emission rate is associated with the unit – Site A – firing the refinery fuel gas with the highest H_2S content, where H_2S is used as an indicator of fuel S content. Finally, note that purging of the TM 202 impinger liquid (with either nitrogen or air to remove SO_2 dissolved in solution) was not conducted for the tests on the refinery fuel gas-fired units.

Table 2. PM Emission Test Results for Natural Gas-Fired Combustion Units from the NYSERDA/API Studies[5,6]

Combustion Category	Unit Type	Test Site ID	Unit Size (MMBtu/hr)	Unit Load (%)	EPA Test Methods[a]					Dilution Sampling Method - Total $PM_{2.5}$ (lb/MMBtu
					Filterable $PM_{2.5}$ (lb/MMBtu)	Filterable PM_{10} (lb/MMBtu)	Condensable PM[b] (lb/MMBtu)	Total $PM_{2.5}$ (lb/MMBtu)	Total PM_{10} (lb/MMBtu)	
External	Boiler	C[c]	62.5	70	0.000068	0.000077	0.0012	0.0013	0.0013	0.000056
		Delta[d]	65	28-39	NM	NM	NM	NM	NM	0.00053
	Heater (w/SCR)	Charlie[e]	300	95-100	0.000055	0.00010	0.0010	0.0011	0.0011	0.00016
External Combustion Unit Testing Average:					*0.000062*	*0.000089*	*0.0011*	***0.0012***	***0.0012***	***0.00025***
Internal	Turbine (w/SCR)	Bravo[f]	NA	85-100	0.00009	0.00029	0.0030	0.0031	0.0033	0.00024
		Echo[g]	NA	59-100	NM	NM	NM	NM	NM	0.00013
Internal Combustion Unit Testing Average:					*0.00009*	*0.00029*	*0.0030*	***0.0031***	***0.0033***	***0.00019***

Notes: NM = No Measurement; NA = Not Available

[a] EPA Conditional Test Method 040 for filterable PM and Test Method 202 for condensable PM, except that each test run was for 6 hours instead of the TM standard of one hour

[b] All condensable PM is smaller than $PM_{2.5}$

[c] Site C boiler is retrofitted with flue gas recirculation; otherwise, it has no add-on emissions control equipment

[d] Site Delta boiler has no add-on emissions control equipment

[e] The heater at Site Charlie is equipped with a selective catalytic reduction (SCR) system, which was on for all tests

[f] Site Bravo is a combined cycle facility with one combustion turbine and one HRSG with duct burners (on for test nos. 1, 2, and 3 [part time] and off for test no.4). The total generating capacity of the facility is 240 MW. The unit is equipped with a lean pre-mix combustion system, SCR system, and oxidation catalyst, which were in operation during all tests.

[g] Site Echo is a combined cycle facility with two combustion turbines and one HRSG with duct burners (off for all test runs). The total baseload capacity of the facility is 512 MW. The unit is equipped with an SCR system and oxidation catalyst, which were in operation during all tests.

[5] Final NYSERDA studies for sites Bravo, Charlie, Delta, and Echo are available on NYSERDA website: http://www.nyserda.ny.gov/Publications/Research-and-Development-Technical-Reports/Environmental-Reports/EMEP-Publications/EMEP-Final-Reports.aspx

[6] Final API study for Site C: *Characterization of Fine Particulate Emission Factors and Speciation Profiles from Stationary Petroleum Industry Combustion Sources*, Publication No. 4712, American Petroleum Institute: Washington, DC, 2001

Table 3. PM Emission Test Results for Refinery Fuel Gas-Fired Combustion Units from the NYSERDA/API Studies[7,8]

Combustion Category	Unit Type	Test Site ID	Unit Size (MMBtu/hr)	Unit Load (%)	Fuel Sulfur Content (ppmv H_2S)	EPA Test Methods[a]					Dilution Sampling Method - Total $PM_{2.5}$ (lb/MMBtu)
						Filterable $PM_{2.5}$ (lb/MMBtu)	Filterable PM_{10} (lb/MMBtu)	Condensable PM[b] (lb/MMBtu)	Total $PM_{2.5}$ (lb/MMBtu)	Total PM_{10} (lb/MMBtu)	
External	Boiler	A[c]	650	57	42	0.000025	0.000025	0.0097	0.0097	0.0097	0.00036
	Heater	Alpha[d]	184.9	85-91	2.8[e]	0.00043	0.00060	0.0079	0.0083	0.0085	0.000052
		B[f]	114	44	7.7	0.00022	0.00064	0.0046	0.0048	0.0052	0.000054
External Combustion Unit Testing Average:						*0.00023*	*0.00042*	*0.0075*	***0.0077***	***0.0079***	***0.00020***
Internal	Turbine (w/SCR)	Golf[g]	NA	99	28	NM	NM	NM	NM	NM	***0.00029***

Notes: NA = Not Available; NM = No Measurement

[a] EPA Conditional Test Method 040 for filterable PM and Test Method 202 for condensable PM, except that each test run was for 6 hours instead of the TM standard of one hour

[b] All condensable PM is smaller than $PM_{2.5}$

[c] Site A boiler has no add-on emissions control equipment.

[d] Site Alpha consists of a two heaters – a 78.9 MMBtu/hr unit and a 106 MMBtu/hr unit – that vent to a common stack with no add-on emissions control equipment.

[e] Gas sample analyses also noted an average of 65.4 ppmv of unidentified S compounds for the test runs

[f] Site B heater has no add-on emissions control equipment.

[g] Site Golf is a cogeneration facility with one combustion turbine and one HRSG with duct burners (on for all test runs). The rated capacity of the facility is 48 MW. The unit is equipped with an SCR system and oxidation catalyst, which were in operation during all tests.

[7] Final NYSERDA studies for sites Alpha and Golf are available on NYSERDA website: http://www.nyserda.ny.gov/Publications/Research-and-Development-Technical-Reports/Environmental-Reports/EMEP-Publications/EMEP-Final-Reports.aspx

[8] Final API studies for sites A and B: *Characterization of Fine Particulate Emission Factors and Speciation Profiles from Stationary Petroleum Industry Combustion Sources*, Publication Nos. 4703 and 4704, American Petroleum Institute: Washington, DC, 2001

Alternate PM Emission Factors for Regulatory Assessment and Permitting

The following provides examples of specific uses of alternate PM emissions factors for emission inventories, regulatory assessments, and permitting.

2002 National Emissions Inventory

In August 2005, EPA stated that they intended to revise the PM emissions from gas combustion in the final version of the 2002 National Emissions Inventory (NEI)[9]. The reason for the adjustment was that EPA believed that the current AP-42 emission factors for condensable PM emissions were too high. The EPA based their emission factor adjustments on the NYSERDA/API studies results for gas-fired external and internal combustion units; however, specific information on the assumptions and methodology used in developing these adjustments is not available. Emission factor adjustments were made to a broad range of gas-fired combustion units, including external combustion boilers used for electric generation, industrial purposes, and commercial/institutional purposes; internal combustion engines used for electric generation, industrial purposes, and commercial/institutional purposes; and industrial processes used in the petroleum industry, oil and gas production industry, and for in-process fuel use.

At the request of the Region 5 states, EPA developed and made available in 2010 a comprehensive spreadsheet of revised $PM/PM_{10}/PM_{2.5}$ emission factors for the various combustion units firing gas, including natural gas and refinery fuel gas. The subset of emission factors for external combustion units and combustion turbines is shown in Table 4. These emission factors apply to the firing of either natural gas or refinery fuel gas. Note that the revised filterable PM and PM_{10} emission factors are equivalent and nearly double the revised filterable $PM_{2.5}$ emission factor.

Table 4. Revised EPA PM Emission Factors for the 2002 NEI[10]

Source Type	PM Emission Component	Emission Factors			% Reduction from AP-42 Factor
		Revised 2002 NEI		AP-42 (lb/MMBtu)	
		(lb/MMft^3)	(lb/MMBtu)[a]		
External Combustion Units	Filterable $PM_{2.5}$	0.11	0.00011	0.0019	94
	Filterable PM_{10}	0.2	0.0002	0.0019	89
	Condensable PM	0.32	0.00031	0.0056	94
Combustion Turbines	Filterable $PM_{2.5}$	0.11	0.00011	0.0019	94
	Filterable PM_{10}	0.2	0.0002	0.0019	89
	Condensable PM	0.32	0.00031	0.0047	93

[a] Converted from lb/MMft^3 to lb/MMBtu assuming a natural gas heat content of 1,020 Btu/ft^3; a similar conversion for refinery fuel gas, which generally has a higher heat content than natural gas, would yield slightly lower lb/MMBtu emission factors

[9] ftp://ftp.epa.gov/EmisInventory/2002finalnei/documentation/point/pm_adjustment_2002_nei.pdf, accessed on February 26, 2013.
[10] ftp://ftp.epa.gov/EmisInventory/2002finalnei/documentation/point/pm_adjustment_2002_nei.pdf: ratios_to_adjust_pmvalues_in_nei_for_naturalgas_combustion082005.xls, accessed on February 26, 2013.

Federal Regional Haze Rule

An additional example of use of the EPA-adjusted emission factors in assessing compliance with air quality regulations was demonstrated by the Western Regional Air Partnership (WRAP) in its Federal Regional Haze Rule evaluation analyses[11]. The WRAP, formed in 1997, is a voluntary organization of western states, native tribes, and federal agencies. The WRAP Stationary Sources Joint Forum used the EPA-adjusted emission factors in the development of baseline and future (2018) PM_{10} and $PM_{2.5}$ emissions inventories for assessing impacts and evaluating emission control strategies pertaining to regional haze within its extensive geographic domain. These assessments were used by WRAP states in support of their regional haze State Implementation Plans, which were submitted to and approved by EPA in the 2007-2012 timeframe.

Permitting of Combustion Units

At least two permit applicants have used alternate PM emission factors based on the NYSERDA/API studies results as the basis for the $PM_{2.5}$ emissions calculations in their permit application, which included modeling to assess compliance with the $PM_{2.5}$ NAAQS. These two projects are located in different states – North Dakota and New Mexico.

North Dakota

In November 2012, a permit application was submitted to the North Dakota Department of Health (NDDH) for a proposed combustion turbine in Morton County, North Dakota. This application showed that the application emission estimates were based on EPA's rationale in developing the total (filterable plus condensable) $PM_{2.5}$ emission rate for the proposed combustion turbine[12]. In particular, for estimating condensable PM emissions, the application took into account the EPA-adjusted emission factor, while allowing for the uncertainty/variation typical of stack test results based on EPA test methods. Based on this approach, a condensable PM emission factor was assumed to equal 50% of the AP-42 emission factor (i.e., 0.00235 lb/MMBtu). For filterable PM emissions, the application relied on the manufacturer's guarantee that was provided for the turbine. In February 2013, on this basis, the NDDH issued the construction permit for the combustion turbine project.

New Mexico

In 2010, a permit application was submitted to the New Mexico Environment Department Air Quality Bureau (NMED-AQB) for the construction of a natural gas-fired simple cycle combustion turbine equipped with SCR. The application used an alternative emission factor for total PM of 0.0040 lb/MMBtu based on an analysis of available test data for the appropriate class of turbines[13] including the NYSERDA/API studies results. The filterable and condensable components of this emission factor

[11] WRAP Point and Area Source Emissions Projections for the 2018 Base Case Inventory, Version 1, prepared by Eastern Research Group, Inc., Sacramento, California, for the Western Governors' Association and the Western Regional Air Partnership, Stationary Sources Joint Forum, January 2006.
[12] *Application for a PSD Permit to Construct a Simple Cycle Combustion Turbine*, November 2012 (updated).
[13] *Air Quality Permit Application, Dona Ana County, New Mexico*, June 2010.

used were 0.0012 and 0.0028 lb/MMBtu, respectively. The available test data were carefully screened, with the focus placed on tests with extended sampling run times where no contamination issues were noted. In June 2011, the NMED-AQB issued the construction permit, stipulating the 0.0040 lb/MMBtu emission rate for the new combustion turbine.

Summary and Concluding Remarks

Table 5 summarizes all the emission factors for natural gas-fired combustion sources discussed in this paper, including the current AP-42 emission factors for comparison. Additional testing using EPA's latest methods and interim guidance would be helpful in developing more representative emission factors for combustion of sulfur containing fuel gas.

It is technically reasonable to rely on the NYSERDA/API studies results as the most representative emission estimate basis to justify the development and use of alternate PM emission factors, especially for condensable PM. These alternate emission factors should be used to develop PM_{10} and $PM_{2.5}$ emission rates for a permit applicant's low-sulfur fuel gas- or natural gas-fired combustion units, especially for the purposes of NAAQS compliance assessment.

There is precedent for using the NYSERDA/API studies data to justify the use of alternate emission factors, which are lower than AP-42 factors or vendor guarantees. Such factors have received regulatory approval as part of the permitting of projects in at least two states. In addition, governmental organizations, guided by the NYSERDA/API studies results, have relied on alternate PM emission factors for their own regulatory assessments. Both regulators and non-regulators alike recognize that the AP-42 emission factors are not representative of actual PM emissions from combustion units. The use of alternate PM emission factors will only grow over time, driven by the restrictive $PM_{2.5}$ NAAQS and more detailed accounting of $PM_{2.5}$ emissions now required for NAAQS compliance demonstrations and other regulatory assessments.

In developing an alternate PM emission factor, it is important for permit applicants to provide total PM_{10} and $PM_{2.5}$ emission rates in the application that demonstrate compliance with NAAQS, as well as an emission limit for which compliance can be reasonably demonstrated with standard EPA test methods using extended test run durations and other issued guidance.

In the early stages of permit application development for combustion units, applicants should carefully analyze and consider available PM stack test results for similar units under similar duties, vendor data, and research study (e.g., NYSERDA/API) results. Finally, after permit issuance, construction and start of operation, it is very important that combustion unit PM_{10} and $PM_{2.5}$ performance tests (especially Method 202) be conducted very carefully, avoiding as best as possible, contamination in sample collection, processing, and analysis. Such performance tests should be conducted using extended sampling periods to help assure collection of an adequate sample amount that can be measured more precisely. Also, EPA's April 2014 interim guidance for the treatment of condensable PM results should be applied in the processing of Method 202 measurements to increase the representativeness of resulting emission factors.

Table 5. Summary of PM Emission Factors for Natural Gas-Fired Combustion Units Discussed in this Paper

Unit Type	PM Emission Component	Emission Factors (lb/MMBtu)							
		NYSERDA/API Studies				EPA 2002 NEI	AP-42	North Dakota	New Mexico
		Natural Gas-Firing		RFG-Firing					
		DS Method	EPA TMs	DS Method	EPA TMs				
External Combustion Unit (Boiler or Heater)	Filterable $PM_{2.5}$	-	0.000062	-	0.00023	0.00011	0.0019	-	-
	Filterable PM_{10}	-	0.000089	-	0.00042	0.0002	0.0019	-	-
	Condensable PM[a]	-	0.0011	-	0.0075	0.00031	0.0056	-	-
	Total $PM_{2.5}$	***0.00025***	***0.0012***	***0.00020***	***0.0077***	***0.00041***	***0.0075***	***-***	***-***
	Total PM_{10}	***-***	***0.0012***	***-***	***0.0079***	***0.00051***	***0.0075***	***-***	***-***
Combustion Turbine	Filterable $PM_{2.5}$	-	0.00009	-	-	0.00011	0.0019	0.0051[b]	0.0012
	Filterable PM_{10}	-	0.00029	-	-	0.0002	0.0019	0.0051[b]	0.0012
	Condensable PM[a]	-	0.0030	-	-	0.00031	0.0047	0.0023	0.0028
	Total $PM_{2.5}$	***0.00019***	***0.0031***	***0.00029***	***-***	***0.00041***	***0.0066***	***0.0074***	***0.0040***
	Total PM_{10}	***-***	***0.0033***	***-***	***-***	***0.00051***	***0.0066***	***0.0074***	***0.0040***

Notes: RFG = Refinery Fuel Gas; DS = Dilution Sampling; TM = Test Method; NEI = National Emissions Inventory

[a] All condensable PM is smaller than $PM_{2.5}$

[b] Filterable PM for the North Dakota project was based on manufacturer's guarantee, not on testing results analysis

Appendix: History of PM Measurement

The history of PM measurement methods begins in 1971 with promulgation of EPA TM 5, following on the heels of promulgation of the TSP NAAQS earlier that same year. In 1978, EPA promulgated TM 17 as an alternative method for measuring PM, where the stack gas PM concentration is known to be independent of temperature. Both TMs 5 and 17 rely on a filter media to capture PM for emissions quantification, thus measuring filterable PM.

With the promulgation of the PM_{10} NAAQS in 1987, a new method was needed to quantify PM_{10} emissions specifically because TMs 5 and 17 provided a PM measurement that included all size fractions. Therefore, in April 1990, EPA promulgated TM 201/201A as the stack test method for filterable PM_{10}. (See 40 CFR Part 51, Appendix M.)

EPA recognized that condensable PM emissions can be a significant fraction of the actual total PM_{10} emissions from combustion sources that needed to be measured. As a result, in December 1991, EPA promulgated TM 202. (See 40 CFR Part 51, Appendix M.) TM 202 is typically used in conjunction with TM 5 or TM 201A to measure total (filterable plus condensable) PM. The TM 202 apparatus actually is the “back half” of the TM 5 or 201A sampling equipment “train.”

In the originally-promulgated version of TM 202, exhaust gases were bubbled through water-filled impingers, with the solution being analyzed in a laboratory to quantify the organic and inorganic PM fractions. (Typically, for combustion sources, the inorganic fraction predominates, with sulfates comprising most of this fraction.) However, numerous studies conducted both inside and outside EPA indicated that non-condensable gases (e.g., SO_2) could react in the water solution to form condensable PM (sulfates) that would not have otherwise formed in the stack. The formation of this sulfate artifact or “pseudo-particulate” resulted in elevated TM 202 stack test results.

The promulgation of the $PM_{2.5}$ NAAQS in 1997 and revised, more restrictive $PM_{2.5}$ NAAQS in 2006 provided increased impetus to improve stack gas PM measurement methods for the smaller size fraction. As a result, in December 2010, EPA promulgated revised versions of TMs 201A and 202. Changes to TM 201A involved mainly hardware, most notably adding a $PM_{2.5}$ cyclone and a $PM_{2.5}$ filter after the PM_{10} cyclone to enable the measurement of filterable $PM_{2.5}$ in addition to filterable PM_{10}. TM 202 was modified to incorporate a condenser and “dry impinger” set-up in the back-half of the sampling train. Also, TM 202 sample recovery and processing procedures were revised, mainly to incorporate existing procedures in the TM that had been optional. The revised version of EPA TM 202 ensures consistency of method application and is intended to improve measurement precision by reducing sulfate artifact (or pseudo-particulate) formation. In fact, EPA research studies showed that these revisions to TM 202 would reduce sulfate artifact formation by at least 90% (75 FR 80118). On April 8, 2014, EPA issued interim guidance allowing permit applicants to use field train proof blanks in lieu of field train recovery blanks and to use blank values as high as 5.1 mg in the processing of TM 202 condensable PM measurements.

RIELLO
Energy For Life

RTC
CONDENSING BOILER

Submission Date: 29 June 2021
Revision: R0 (Original)

Base Supply	Qty.
RTC 6000	4
-	-

Available Models: 3000, 4000, 6000, 8000, & 10 000

Project

Project Name	UNM Hospital Tower Phase II
Site Location	Albuquerque, NM
Installation Altitude	
Gas Inlet Pressure	Asumed 2-5 psig inlet
Engineering Firm	HDR
Installing Contractor	Yearout Mechanical
Riello Representative	Taft Engineering

Project Notes:

Low-fire hold available through touchscreen
Ducted combustion air (flanged adapter included. Transition piece to ducting dimensions by others)

Boiler Construction

General		
	Boiler Type	Condensing Hot Water Boiler
	Construction	3-Pass Wetback Flexible Fire-tube
	Design Approval	ASME Section IV
	Standard Listing & Approvals	ASME, ETL, AHRI
Materials		
Vessel	Furnace, 2nd Pass, Tube-Sheets	SA240 316Ti Stainless
	Tube Bundle	SA-312 316L Stainless
	External Shell	SA-516 Gr.60
	Suitable Venting Materials	AISI 316L, AL29-4C
Temperature & Pressure Ranges		
	Max. Allowable Working Pressure	160 psig (1,103 kPa) [Trim List for Relief]
	Max. Allowable (Design) Temperature	210°F (98°C)
	Operating Temperature Control Range	80°F to 195°F (27°C to 90°C)
	Ambient Temperature Range	32°F to 140°F (0°C to 60°C)
	AHRI Certified Efficiency	94.1%

Boiler Design Basics:

- Stainless steel hydronic fire-tube boiler.
- Water-cooled rear furnace wall
- Thermal-shock proof
- High-mass vessel
- Accessible for maintenance
- Industry leading thermal efficiency
- Industry leading electrical efficiency.
- Ultra-low waterside pressure-drop
- Low-flow capability
- Dedicated low temperature return

The boiler is ETL approved as a package with Riello burners to meet specific project load characteristics, turndown, and elevation requirements. Available options include variable frequency drives, O_2 trim, emissions control (NOx), sequencing control, BMS communication, and custom wiring.

Optional Accessories

Combustion Air Intake Adapter	✓
High Turndown Kit	
Propane Kit (Shipped Loose)	
Variable Speed Drive (for Combustion Air Fan)	✓
VSD / Junction Box Stand	✓
4.3" HMI Burner Mounted Touch Screen	✓
Siemens RWF55 Modulating Control	✓
Liquid Tight Wiring	
Internal Stepdown Transformer (for Control Circuit)	✓
Massimo Sequencing Control Panel	

Factory Pre-Packaged
- Factory insulated
- Burner mounted
- Gas-train mounted, wired, and terminated
- Operating and limit elements are wired, terminated, and secured for shipment.

Items Shipped Loose
- Safety relief valve(s)
- Spool-Piece (for safety limits / gauges)
- Boiler casing panels
- VSD & Support Stand

Boiler & Burner Data

Boiler / Burner Package Data	Boiler Model	RTC 6000
	Max. Fuel Input	6,000 MBH
	Burner Model	RLS280 /EV
	Fuels	Natural Gas & #2 Fuel Oil
	Main Electrical Connection	460V/3PH/60HZ
	Control Voltage	120V/1P/60H (Internal Transformer)
	FLA	9.9 A
	MOCP	15 A
	MCA	12 A
	Controller	Siemens LMV36.520A1
	Effective Turndown Ratio (Firing Gas)	(5.7):1
	NO_x Emissions (Firing N. Gas, Corr. to 3% O_2)	30 ppm
	Exhaust %O_2 Range (Firing N. Gas)	3% to 5% Typical Setup
	Noise Level (dBa)	< 85
	Maximum Water Flow (US-GPM)	750 US-GPM
	Water Volume (US-Gal.)	597 US-Gal
	Water Pressure Drop	1.3 psig at 600 GPM
	Weight (dry) lbs. (Vessel Only)	9,087 lbs + Burner
	Weight (wet) lbs. (Vessel Only)	14,070 lbs + Burner
	Shipping Weight lbs. (Vessel Only)	9,087 lbs + Burner
	Air Intake Connection	Flanged – Rectangular – See drawing
	Water Connections Inlet/Outlet (Flanged)	6 Inch #150 ANSI
	High Temp. Return Water Connection	4 Inch #150 ANSI
	Exhaust Vent Connection	350 mm (Nom. 14 Inch)
	Condensate Drain Connection	1-1/4 Inch NPT
	Boiler Water Drain	1-1/2 Inch NPT
	Boiler Safety Relief	1-1/4 Inch
	Gas Supply Connection	2.0 Inches
	Oil Supply / Return Connections	½" NPT

Safety Components			
	Pressure Relief Valve(s)	Apollo 10-600 Series	*160 psig / 1,102 kPa*
	Flame Safeguard	Siemens LMV	*LMV36*
	High Limit, Manual Reset	Honeywell L4006E1125	*Range: 100-200°F (38-93°C), Manual Reset*
	Thermowell (for High Limit Manual Reset)	Honeywell 121371A/U	*Copper, ½" (or ¾") NPT Connection*
	Operating High Limit, Auto Reset + Thermowell	Honeywell L4006A1117	*Range: 100-240°F (38-115°C), Auto Reset Copper, ½" NPT Connection*
	Modulating Control	Siemens RWF55	*Modulator, Electronic Limit, Auto Reset*
	Operating High Limit / Operating Sensor	Siemens QAE2020.005	*RTD Ni. 1000 Ohm, 2.5 Inch Probe*
	Thermowell (Operating Sensor)	Siemens AQE2000.005	*300 Series SS.,2.5 Inch, 1/2 Inch NPT*
	Low Water Cut-off Control	Safgard 550	*120V, 250°F (121°C) Max.*
	Low Water Cut-off Probe	Safgard EL1214	*¾" NPT*
	Tridicator	Winters TTD407	*3" Dial, 0-200 psig / kPa, 70-320°F /°C*
	Tridicator Thermowell	Winters TST050	*Brass, ½" NPT Connection*
	Blocked Flue Switch	Antunes SMD 8024204107	*Range: 0.17-6.0" WC (0.04-0.15 kPa)*

Limited Warranty - Terms and Conditions

For RTC Series Boiler by Riello (not including control panel, safety devices and Burner)

Rev. 01: May 2016

GENERAL NOTE

This limited warranty is provided by Riello Canada Inc. ("Riello") and covers Riello RTC Series Boilers (the "Boilers"). This warranty is provided to the original purchaser as long as the **Boiler remains installed at its original place of installation. This warranty is provided** in respect of the Boiler heat exchanger and its insulation and casing, and approved accessories designated by Riello. It does not include the boiler control panel, anti-vibration base, safety devices, forced draught burner or anything else not specified herein.

The warranty is conditional upon;

- The proper installation of the Boiler by a qualified HVCA mechanical contractor or installer trained and certified in accordance with the applicable laws and regulations of the jurisdiction in which the boiler is installed (the "Qualified Contractor"); and
- Proper operation and maintenance of the Boiler in accordance with the Boiler operation manual and service bulletins as issued by Riello from time to time

Installation or maintenance of the Boiler by a person other than a Qualified Contractor shall void this warranty.

Any component of a Boiler returned to Riello in connection with this warranty agreement remains the property of Riello.

WARRANTY TERMS & CONDITIONS

(10) TEN YEAR HEAT EXCHANGER WARRANTY

Riello warrants that the heat exchanger of the Boiler shall be free from leakage, thermal shock and condensate corrosion, and shall be free of defects in material and workmanship for TEN (10) YEARS from the date of manufacture, which date is found within the Boiler serial number on the data plate.

The obligation of Riello under this ten year heat exchanger warranty shall be to repair or replace those parts of the heat exchanger determined by Riello to be defective in material and workmanship in the heat exchanger as determined by Riello.

ANY OTHER PARTS WARRANTY`

Riello warrants that the Boiler and approved accessories designated by Riello as standard equipment shall be free of defects in manufacture, material and workmanship for 18 months from shipment or 12 months from start-up (whichever comes first).

The obligation of Riello under this limited warranty shall be to repair or replace those parts determined by Riello to be defective in material or workmanship.

This warranty is only in respect of Boilers for which payment has been made in full

WARRANTY EXCLUSIONS

- Any costs for labour for the examination, removal or reinstallation of allegedly defective Boiler parts, and transportation thereof to and from Riello facilities in North America or Italy, or as determined by Riello.
- Damage to the Boiler or any of its original or authorized replacement parts or other accessories designated by Riello as standard equipment caused by excessive temperatures or pressures, unsuitable fuels, fuel impurities, improper fuel mixture, fuel or gas explosion, electrical, chemical or electrochemical reaction, water impurities, unsuitable water conditions which may have caused unusual deposits within the water side and heat exchanger combustion area of the pressure vessel within the Boiler, water treatment chemicals, or water conditioning systems, electrical failures, insurrection, riots, war, or acts of God, combustion air contaminated externally, air impurities, sulphur or sulphuric action or reaction, dust particles, corrosive vapours, oxygen corrosion, and situating the Boiler in an unsuitable location or continuing use of the Boiler after onset of a malfunction or discovery of a defect.
- Liability arising out of any incorrect burner selection with the Boiler model and for ordinary wear and tear and consumption of parts.
- When firing on #2 fuel oil, a minimum return temperature of 140°F is required unless using oil with a guaranteed <15ppm sulphur content (Ultra Low Sulphur Diesel). Damages resulting from use of #2 fuel oil outside these specifications is excluded.
- When firing on Biogas, a minimum return temperature of 140°F is required unless using gas with a guaranteed <15ppm H2S Content (Hydrogen Sulphide). Damages resulting from use of Biogas outside these specifications is excluded.
- Flue gas corrosion.

WARRANTY AND DAMAGES LIMITATIONS

The obligations of Riello hereunder shall also be subject to the following terms and conditions;

- Any repaired or replaced component of a Boiler and approved accessories will be warranted only for the remaining unexpired term of the warranty applicable to the original Boiler.
- Negotiations, intermediate acts, discussions, disagreements or denials concerning alleged defects or deficiencies shall not extend any warranty herein and shall not waive or be deemed to waive any requirement for notification of defect or deficiency.
- Additional costs arising out of the performance of this warranty including but not limited to transport, labour, installation, assembly, testing and putting a Boiler back into operational use are the responsibility of the owner.
- RIELLO IS NOT RESPONSIBLE FOR ANY INDIRECT, INCIDENTAL OR CONSEQUENTIAL DAMAGES CAUSED BY A BOILER.

  RIELLO DOES NOT WARRANT OR GUARANTEE THE MERCHANTABILITY OR FITNESS OF ANY BOILER FOR ANY PARTICULAR PURPOSE.
- Riello does not extend this warranty to any Boiler or related parts or products that are not supplied and sold directly by Riello to Bosch.

ASSIGNABILITY

This warranty is not assignable.

WARRANTY NOTIFICATION

In case of warranty claims, notify the Qualified Contractor who installed your Boiler, who will in turn notify Riello. Riello reserves the sole right to make all warranty decisions. No person may provide service under this warranty without the prior approval of Riello.

The obligations of Riello under this warranty are conditional upon Riello having been notified in writing by the Qualified Contractor within FOURTEEN (14) DAYS of the alleged defect or deficiency giving rise to a claim under this warranty.

APPLICABLE LAW, JURISDICTION AND DISPUTE RESOLUTION

All disputes, claims or demands arising from or relating to this warranty shall be determined in accordance with the laws within the Province of Ontario, Canada and the Courts of Ontario shall have exclusive jurisdiction to adjudicate all such disputes, claims or demands.

If you have any questions about the coverage provided by this warranty, contact Riello at one of the addresses set out below

Riello Burners North America – Canada
2165 Meadowpine Blvd.
L5N 6H6 Mississauga
(Ontario)

Riello Burners North America – America
35 Pond Park Road
02043 Hingham
(Massachusetts)

Tel : +1-800-4-RIELLO / +1-800-474-3556
Fax : +1-866-2-RIELLO
Web site: www.rielloboilers.com

HURST STEAM BOILER SALES ORDER ENTRY FORM (R30) 12/2/20

DATE: **02-05-21** SHIP DATE: **SUBMITAL** PROJECT NO.: **S2100009** HBC J.O. NO.: **2100321**

SOLD TO: **WELCH'S BOILER SERVICE**
6060 ISLETA BLVD. SW
ALBUQUERQUE, NM 87105

END USER: **UNM HOSPITAL**
ALBUQUERQUE, NM

CONTACT: **KEITH WELCH**

PH: **(505)-877-0356** FAX: **(505)-877-9409** CONTACT 2: **KENNETH WELCH**

E-MAIL ADDRESS: **KEITH@WELCHSBOILER.COM** P.O. NO: **1384**

SALES TAX NO. STATE **(NM)** D&B:

APPROVALS: SALES CREDIT: TYPED BY: **GG**

PRICING:

TERMS OF PAYMENT: ( ) NET 30 ( )

SHIP TO: **WELCH'S BOILER SERVICE**
6060 ISLETA BLVD. SW
ALBUQUERQUE, NM 87105

(**X**) PREPAY & ADD
( ) 3RD PARTY
( ) COLLECT
( ) ALLOWED
( )

SHIPPING INSTRUCTIONS:

EQUIPMENT DESCRIPTION: **700 HP; SERIES 400 WETBACK; HIGH PRESSURE STEAM BOILER**

BOILER SERIES: **400** (**3**) PASS ( ) DRY BACK (**X**) WET BACK ( ) SEMI-WETBACK
(**X**) SCOTCH ( ) FIREBOX ( ) LPE ( ) LPX ( ) VERTICAL (**X**) FIRETUBE ( ) TUBELESS
MODEL NO: **S4 – GP2 – 700 – 150** BHP: **700** PSPH: **24150** MBH: **23433**
STEAM PRESSURE: **150** PSI DESIGN, **110** PSI OPERATING ASME SECTION (**X**) I ( ) IV
FIRESIDE HEATING SURFACE: **3500** SQ.FT. FURNACE VOLUME: **220** CU. FT.
(**X**) UL LABEL B (**X**) ASME CSD-1 ( ) CRN ( ) SUBMITTAL DRAWING ONLY:
(**X**) STANDARD PAINT, INSULATION & JACKET (**X**) SUBMITTAL DRAWING / FULL:
(**X**) SPECIAL FINISHING: **STACKMASTER INERNAL STACK ECONOMIZER; PIPED TO RIGHT SIDE**
( )

PRIMARY BOILER OPENINGS: S = SCREWED F = FLANGED * = SPECIAL
(**F**) MAIN STEAM OUTLET: **8 ″** (**S**) FEEDWATER CONN: **2.5 ″**
(**S**) BLOWDOWN CONN: **2 ″** (**S**) SURFACE: 1.25”
( ) ( )

STACK OUTLET: **28 ″** (**X**) VERTICAL ( ) HORIZONTAL (**X**) **5”** SERIES “B” THERM. 750 ºF
(**X**) MANUAL DAMPER (**X**) ****FGR TO SMOKEBOX ON RIGHT SIDE****
(**X**) 12” x 16” MANHOLE (**5**) 3” x 4” HAND HOLES ( ) 2” CPLGS. ( ) 1.5" CPLGS.
FRONT DOORS: ( ) HINGED (**X**) DAVITED REAR DOORS: ( ) HINGED (**X**) DAVITED
( ) EXPLOSION RELIEF DOORS REQD. ( ) OTHER SPECIAL ITEMS:

GAUGE GLASS SET: ( ) CONB. #24350, 250 PSI ( ) PLEXIGLASS GUAGE GLASS PROTECTOR
( ) WATER COLUMN DRAIN VALVE: ( ) APOLLO 70 -140 (**X**) **JERGUSSON 15R20 ARMORED GAUGE GLASS**
( )

PRIMARY LWCO: (**X**) M & M #157S-RL (**X**) **SIEMENS DP TRANSMITTER** (**X**) AUTO RESET ( ) MR
( ) ON/OFF PUMP CONTROL (**X**) PROPORTIONING CONTROL ( ) FEEDER
( ) AUDIBLE ALARM ( ) LIGHT MOUNT ON: ( ) LEFT (**X**) RIGHT
( )

AUX. LWCO: ( ) M & M # 750-MT-120, (**X**)**WARRICK** ( ) AUTO RESET (**X**) MR
( ) AUDIBLE ALARM ( ) LIGHT MOUNT ON: ( ) LEFT (**X**) RIGHT
( )

HWL ALARM: ( ) M & M # 750, (**X**) **WARRICK, IN ABOVE EXTERNAL** (**X**) AUTO RESET ( ) MR
( ) AUDIBLE ALARM ( ) LIGHT MOUNT ON: ( ) LEFT (**X**) RIGHT
( )

SAFETY RELIEF VALVE (S): KUNKLE FIG# **6010** SET @ **150** PSI STEAM
(2) 2" X 2.5" **(1) 1.5" X 2"** ( )

( )

PRESSURE GAUGE: (**X**) PRECISION ( ) (**X**) **6″ 0 - 300** PSI
( )
FEEDWATER VALVES: **2.5 ″ 200** PSI. ( ) LFT (**X**) RT ( ) SCREWED (**X**) FLANGED
(**X**) STOP VALVE: ( ) APOLLO 70-140 BALL (**X**) **DAVIS 15FGLW**
(**X**) CHECK VALVE; (**X**) CHECK-ALL 316SS IN A UNION ( )
( )
PROPORTIONING FW VALVE: **1”** (**X**) NPT ( ) FLANGED (**X**) **S&S #8230 ACTUATOR**
( )
THREE VALVE BY PASS: **X”** (**X**) NPT ( ) FLANGED ( )
(**X**) APOLLO 70-140 BALL VALVES ( )
BLOWDOWN VALVES: **2 ″ 200** / **300** PSI, (**X**) LFT ( ) RT (**X**) SCREWED ( ) FLANGED
(**2**) QUICK OPENING, (**X**) UB 425 ( )
(**1**) SLOW OPENING, ( ) UB 226UT; (**X**) UB 325U ( )
(**X**) SURFACE BLOWDOWN SKIMMER TUBE & BUSHING (**X**) **.75**” APOLLO 70-140 BALL VALVE
(**X**) **.75**” **UB FIG 364 ANGLE PATTERN** ( )
PRESSURE/TEMPERATURE CONTROLS: ( ) HONEYWELL ( )
(**X**) OPERATING **L404F 1102** (**X**) PROPORTIONING **W/ BURNER**
(**X**) HI LIMIT **L4079B 1041** (**X**) MR ( ) LIGHT ( ) ALARM
(**X**) AUTO LO FIRE HOLD ( ) HIGH PRESSURE WELL (SEC. 1)
( ) DAY NITE: ( )
OTHER BOILER TRIM:
(**X**) **8" X 6" 250# ASME SPOOL PIECE**
(**X**) **6" 300# MAIN STEAM VALVE; DAVIS 30FGAW**
(**X**) **6" 250# ANGLE NON RETURN; NIBCO F869-B**
(**X**) **TAPPING & FREE BLOW FOR ABOVE; 1/2" BALL VALVE**
(**X**) **HURST STACKMASTER INTERNAL STACK ECONOMIZER W/ STAINLESS STEEL TUBES & FINS**
( ) **ON RIGHT SIDE OF BOILER. PIPED W/ APOLLO 70-140 BALL VALVES. THERMOMETERS REQ'D**
( ) **ON INLET & OUTLET (AIR SIDE & WATER SIDE)**
( ) **TEE CONNECTION W/ 3/4" RECIRC ORIFCE PIPED IN UNION *FIELD PIPING REQUIRED TO DA**
( )
BURNER DATA: (**X**) **OILON** QUOTE #: **2012-0159-JC V3**
FURNISHED BY: (**X**) HBC ( ) (**X**) WE MOUNT ( ) FIELD MOUNT
BURNER MODEL: **GKP-700M-II**
AGENCY APPROVALS: (**X**) UL (**X**) CSD-1 ( ) FM ( ) NFPA 85 ( ) XL GAPS ( )
( )
FUELS: (**X**) NAT.GAS @ **7 PSI** ( ) @ (**X**) #2 OIL ( ) # OIL ( )
IGNITION TYPE: (**X**) GAS PILOT (**X**) DIRECT SPARK ( )
ELECTRICAL: MOTORS **460** / **60** / **3** (**X**) CONTROL TRANSFORMER ( )
30 HP BLOWER (**X**) OIL PUMP **5.5 HP**
3 ″ GAS TRAIN ON (**X**) LFT ( ) RT ( ) AIR COMPRESSOR ( ) LFT ( ) RT ( )
( )
CONTROL PANEL: ( ) ON BURNER (**X**) SIDE OF BOILER (**X**) **RIGHT SIDE BOILER RAIL**
( )
PANEL LIGHTS: (**X**) POWER (**X**) FUEL ON (**X**) CFH ( ) IGNITION ( ) ALARM (**X**) FF
( ) DRAFT ( ) ( ) ( ) ( ) ( )
( )
ALARM ( ) BUZZER ( ) ( ) AUTO SILENCER ( ) TO ALARM ON *** ABOVE
( )
OPERATING SEQUENCE: ( ) ON/OFF ( ) LHO ( ) LHO, PLFS ( ) LHL ( ) LHL, PLFS
(**X**) FULL MOD. W/ POT. ( )
SIEMENS TS-1000 6" TOUCHSCREEN IN BURNER PANEL
LMV52 W/ VFD & O2 TRIM (PROBE SHIPS LOOSE)

LOCATION/DESCRIPTION OF COMPONENTS

A	MAIN STEAM OUTLET – 8", 300# FLANGE	P	SPARE COUPLING – 3", 3000# NPT
B	FEEDWATER CONNECTION – 2.5", 300# FLANGE	Q	FEEDWATER VALVES – 2.5", 250psi (1) STOP VALVE, FLANGED DAVIS GATE
C	BLOWDOWN CONNECTION – 2", 3000# NPT		(1) CHECK VALVE, FLANGED CHECK–ALL IN A UNION
D	SURFACE BLOWDOWN CONNECTION – 1.25", 3000# NPT	R	PROPORTIONING VALVE – 1", SCHUBERT & SALZER #8230 W/ACTUATOR
E	STACK OUTLET – 28", VERTICAL W/MANUAL STACK DAMPER	S	3–VALVE BY–PASS – WITH APOLLO 70–140 BALL VALVES
F	STACK THERMOMETER – 5" SERIES "B", 0–750°F	T	BLOWDOWN VALVES – 2", 300/200psi (2) QUICK OPENING UB 425
G	12"x16" MAN HOLE		(1) SLOW OPENING UB 325U
H	3"x4" HAND HOLE – QTY. (5)	U	SURFACE BLOWDOWN SKIMMER TUBE & BUSHING – (1) 0.75" APOLLO 70–140 BALL VALVE
I	GAUGE GLASS SET – JERGUSON 15R20 ARMORED GAUGE GLASS		(1) 0.75" UB FIG. 364 ANGLE PATTERN METERING VALVE
J	WATER COLUMN DRAIN VALVE – APOLLO 70–140	V	PRESSURE TEMPERATURE CONTROLS – HONEYWELL (1) OPERATING L404F–1102
K	PRIMARY L.W.C.O./PROPORTIONING – M&M 157S–RL W/SIEMENS DP TRANSMITTER		(1) HI LIMIT L4079B–1041 (1) PROPORTIONING WITH BURNER
L	AUXILIARY L.W.C.O. – WARRICK PROBES IN EXTERNAL COLUMN	W	BURNER – OILON MODEL# GKP–700M–II
M	SAFETY RELIEF VALVES – KUNKLE 6010, SET @ 150psi – SHIP LOOSE	X	GAS TRAIN – 3", NATURAL GAS @ 7psi MOUNT ON LEFT SIDE
	QTY (2) 2"x2.5", QTY (1) 1.5"x2"	Y	FGR PIPING FROM BURNER INLET TO SMOKEBOX
N	PRESSURE GAUGE – 6", 0–300psi – SHIPS LOOSE	Z	HURST STACKMASTER INTERNAL ECONOMIZER PIPED TO RIGHT SIDE OF BOILER
O	SPARE COUPLING – 1", 3000# NPT		

NOTES:
SPECIAL FINISHING –
* STACKMASTER INTERNAL STACK ECONOMIZER PIPED TO RIGHT SIDE
* FGR PIPED FROM BURNER INLET TO SMOKEBOX ON RIGHT SIDE

OTHER BOILER TRIM –
* 8"x6", 250# ASME SPOOL PIECE
* 6", 300# MAIN STEAM VALVE; DAVIS 30FGAW
* 6", 250# ANGLE NON–RETURN; NIBCO F869–B
* TAPPING & FREE BLOW FOR ABOVE; 0.5" BALL VALVE

BURNER DATA –
* OILON BURNER PANEL MOUNTED ON RIGHT SIDE BOILER RAIL
* SIEMENS TS–1000 6" TOUCHSCREEN IN BURNER PANEL
* LMV52 W/VFD & O2 TRIM (PROBE SHIPS LOOSE)

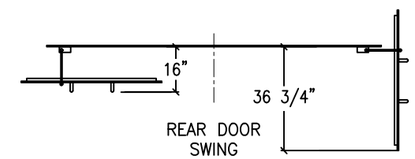

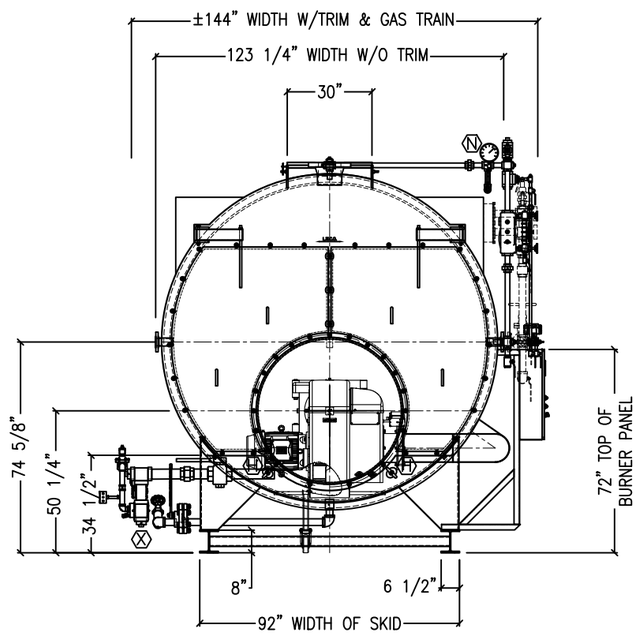

FRONT VIEW

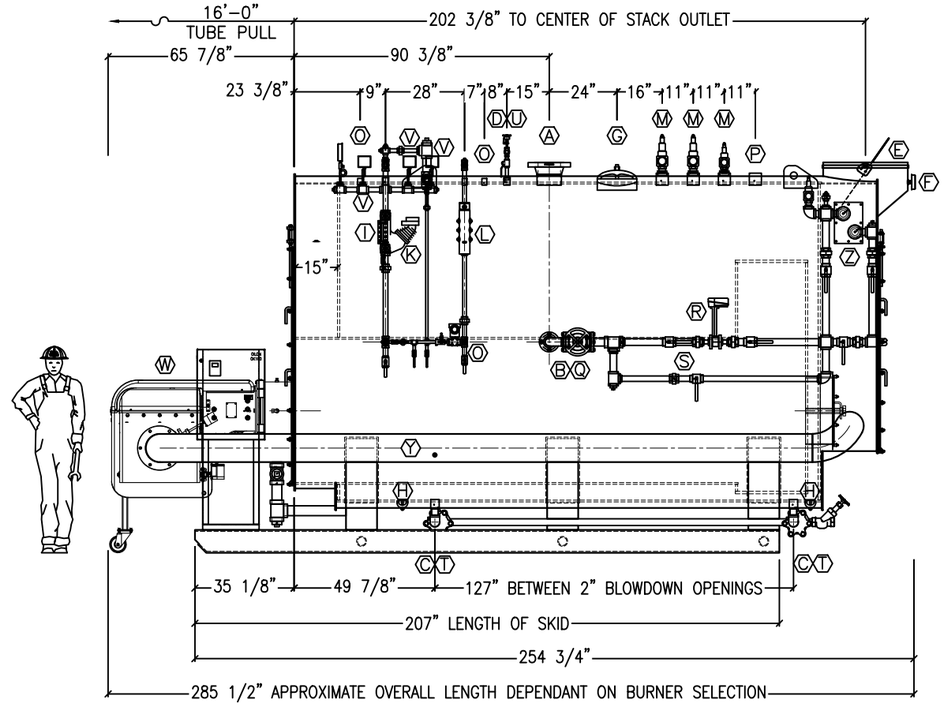

RIGHT SIDE VIEW

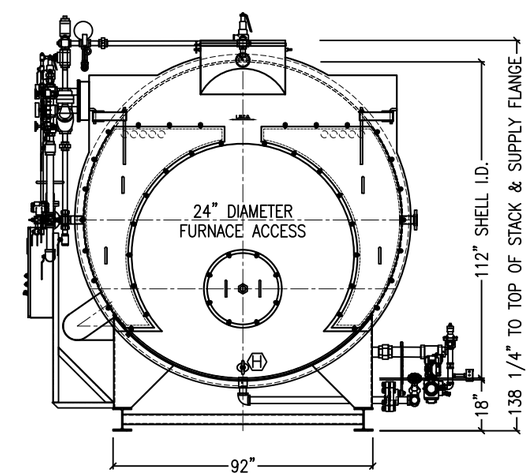

REAR VIEW

MINIMAL CLEARANCES HIGH PRESSURE:
ABOVE – 48" FRONT – 96" CHIMNEY CONNECTOR – 36"
REAR – 36" SIDES – 36" FLOOR TO BE NON–COMBUSTIBLE

PRELIMINARY DRAWING
DIMENSIONS SUBJECT TO CHANGE WITHOUT NOTICE.
CONSULT FACTORY FOR CERTIFIED DRAWINGS

BOILER SPECIFICATION CHART

BUILT TO ASME CODE SECTION I FOR:	150 PSI STEAM
HEATING SURFACE:	3,500 SQ. FT.
FURNACE OUTSIDE DIAMETER:	52 INCHES
FURNACE VOLUME – FURNACE & TURNAROUND:	220 CU. FT.
WATER CAPACITY – OPERATING:	3,126 GALLONS
WATER CAPACITY – FLOODED:	4,046 GALLONS
SHIPPING WEIGHT	48,100 LBS.

REV	BY	DATE	CHK'D	REASON FOR CHANGE

THIS DRAWING IS THE PROPERTY OF HURST BOILER AND WELDING CO., INC. AND MAY NOT BE COPIED OR REPRODUCED IN ANY WAY UNLESS AUTHORIZED IN WRITING BY HURST BOILER AND WELDING CO., INC. AND MUST BE RETURNED UPON REQUEST.

HURST BOILER & WELDING CO., INC.
100 BOILERMAKER LANE, COOLIDGE, GA. 31738
PHONE: 229-346-3545 FAX: 229-346-3874

WELCH'S BOILER SERVICE
UNM HOSPITAL - ALBUQUERQUE, NM

SERIES 400, SECTION I STEAM, 700 HP
3 PASS WETBACK SCOTCH BOILER, 150 PSI

SCALE:	DWN_BY	DWN_DATE	CKD_BY	CKD_DATE	LAST_SAVED	REV
N.T.S.	J.E.H.	2/25/2021	G.G.	2/25/2021	JAMES	0
SHT# 0.1 OF:	__	DWG NO:	2100321 WELCHS BOILER SERVICE			

HURST

BOILER & WELDING CO., INC.

AVAILABLE WITH LOW NOX

HURST SERIES 400

3-PASS SCOTCH MARINE DESIGNwith Wetback Construction

HIGH PRESSURE BOILER

Capacities From 30 to 1500 BHP.
1004 to 50213 MBTU/HR.

STEAM
Pressures to 15-300 PSI.

HOT WATER
Section I and Section IV

"Wet back design eliminates, costly deteriorating refractory rear doors and baffles between flue gas passes."

SKID MOUNTED
MODULAR PACKAGED

HURST PERFORMANCE SERIES BOILERS

SERIES 400

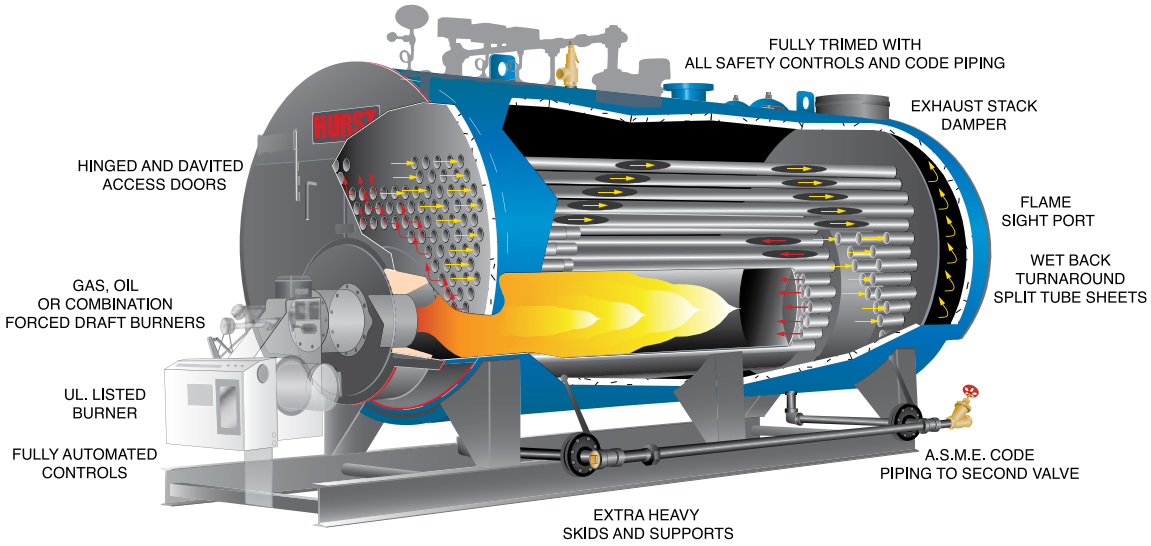

SEMI WET BACK

BOILER SPECIFICATIONS

	BOILER HORSEPOWER			30	40	50	60	70	80	100	125	150	200	250	
	HEATING SURFACE	FIRESIDE	SQ. FT.	150	200	250	300	350	400	500	625	750	1000	1250	
	STEAM OUTPUT	FROM &@ 212°	LBS/HR	1035	1380	1725	2070	2415	2760	3450	4313	5175	6900	8625	
	GROSS OUTPUT		MBH	1004	1339	1674	2009	2343	2678	3348	4184	5021	6695	8369	
	FIRING RATE GAS	1,000 BTU/CF	CFH	1260	1680	2100	2520	2940	3360	4200	5250	6300	8400	10500	
	FIRING RATE LP GAS	91,500 BTU	GPH	13.8	18.4	23	27.5	32	36.7	46	57	69	92	115	
	FIRING RATE OIL #2	140,000 BTU	GPH	9	12	15	18	21	24	29.9	37.4	45	60	75	
	FIRING RATE OIL #5 & #6	150,000 BTU	GPH	8.4	11.2	14	16.8	19.6	22.4	28	35	42	56	70	
A	*NOTE: 1 STEAM OUTLET SIZE	150 PSI	IN	1 1/2	2	2 1/2	2 1/2	3	3	4	4	4	4	6	A
A	*NOTE: 2 STEAM OUTLET SIZE	15 PSI	IN	4	4	4	6	6	6	8	8	8	8	10	A
B	*NOTE: 2 WATER SUPPLY SIZE	30 PSI	IN	4	4	4	6	6	6	8	8	8	8	10	B
C	*NOTE: 2 WATER RETURN SIZE	30 PSI	IN	4	4	4	4	4	4	6	6	6	6	8	C
D	FEEDWATER CONNECTION SIZE		IN	3/4	3/4	3/4	1	1	1 1/4	1 1/4	1 1/4	1 1/4	1 1/2	1 1/2	D
E	BLOWDOWN CONNECTION (BTM)	HIGH PRESS.	IN	1	1 1/4	1 1/4	1 1/4	1 1/4	1 1/4	1 1/4	1 1/4	1 1/4	1 1/4	1 1/4	E
E	BLOWDOWN CONNECTION (BTM)	LOW PRESS. & HW	IN	1 1/4	1 1/4	1 1/4	1 1/2	1 1/2	1 1/2	1 1/2	1 1/2	1 1/2	2	2	E
F	STACK OUTLET SIZE O.D.		IN	10	10	10	12	12	12	14	14	16	16	18	F
G	FURNACE O.D.		IN	14	14	16	18	18	18	22	26	26	30	32	G
H	SHELL I.D.		IN	40	40	44	48	48	48	54	60	60	66	72	H
I	SUPPLY HEIGHT		IN	55 1/4	55 3/8	59 3/4	63 3/4	66 5/8	66 5/8	74 5/8	81 3/4	81 3/4	90 3/4	93 3/4	I
J	WIDTH WITHOUT TRIM		IN	46	46	50	54 5/8	54 5/8	54 5/8	60	66 1/2	66 1/2	72 1/2	78 1/2	J
K	WIDTH WITH TRIM		IN	58	58	60	66	66	66	72	79	79	84	92	K
L	SKID WIDTH		IN	34	34	36	40	40	40	44	48	48	51	57	L
M	END OF SKID FROM FRT. PLATE		IN	13 1/2	14 1/2	15 1/4	15 1/4	15 1/4	15 1/4	21 3/4	25 1/8	25 1/8	23 1/4	28 5/8	M
N	SHELL TO FLOOR		IN	12	12	12	12	12	12	14	15	15	18	15	N
O	SKID LENGTH		IN	81	99	102	102	102	114	114	132	156	168	180	O
P	STACK OUTLET HEIGHT		IN	58 5/8	58 5/8	62 5/8	66 5/8	66 5/8	66 5/8	74 5/8	81 3/4	81 3/4	90 3/4	93 3/4	P
Q	BLOWDOWN LOCATION		IN	35 3/4	41	31 3/4	29 3/4	29 3/4	29 3/4	29 3/4-50	32 7/8-56	32 7/8-80	31 7/8-98	33 7/8-98	Q
R	STEAM OUTLET LOCATION	15 PSI & UP	IN	38 3/8	41 3/4	40 1/4	49 3/4	49 3/4	58 3/4	55 34	55 7/8	73 7/8	78 3/8	70	R
S	SUPPLY LOCATION		IN	20 1/4	20 1/4	33 1/4	37 3/4	37 3/4	43 3/4	32 3/4	32	32	44 38	49 7/8	S
T	RETURN LOCATION		IN	59 1/4	74 1/4	78 1/4	85 3/4	85 3/4	97 3/4	90 3/4	102	114	128 3/8	139 7/8	T
U	BURNER PROJECTION	STND. BURNER	IN	32	36	36	36	36	40.5	40.5	45	45	45	45	U
V	TUBE REMOVAL	FRONT	IN	68	85	88	91	91	102	96	108	132	150	152	V
W	STACK OUTLET LOCATION		IN	78 1/2	95 3/4	98 3/4	104 3/4	104 3/4	116 3/4	111 3/4	123 7/8	148 7/8	166 13/16	170 7/8	W
X	APPROX. OVERALL LENGTH		IN	118	139	142	149	149	167	163	179	205	223	229	X
Y	CENTER LINE OF FURNACE	TO FLOOR	IN	27 5/16	27 5/16	28 13/16	31 5/16	31 5/16	31 5/16	29 13/16	33 3/4	33 3/4	38 3/8	35 3/8	Y
	APPROX. SHIPPING WEIGHT	150 PSI	LBS	3500	4100	4700	6450	6700	7150	8200	10400	11800	16600	18750	
	APPROX. SHIPPING WEIGHT.	15 & 30 PSI	LBS	3400	4000	4500	5665	5900	6200	7200	9400	10800	13700	17750	
	WATER CAPACITY - STEAM	NWL	GALS	215	272	324	389	371	429	482	681	848	1126	1412	
	WATER CAPACITY - WATER	FLOODED	GALS	252	320	382	445	427	492	564	793	985	1350	1633	
	BOILER HORSEPOWER			30	40	50	60	70	80	100	125	150	200	250	

NOTE:1 3"& ABOVE ARE 300# ANSI FLANGE.
NOTE:2 4" & ABOVE ARE 150# ANSI FLANGE.
NOTE: 100 HP & LARGER HAS 12" X 16" MANWAY

ALL DIMENSIONS ARE IN INCHES
CERTIFIED DRAWING AVAILABLE UPON REQUEST.
DIMENSIONS SUBJECT TO CHANGE WITHOUT NOTICE.

Inspected and registered with the National Board of Boiler & Pressure Vessel Inspectors.

hurstboiler.com

Designed, constructed and stamped in accordance with the requirements of the ASME Boiler Codes.

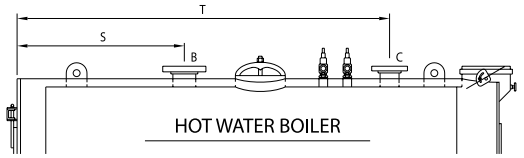

HOT WATER BOILER

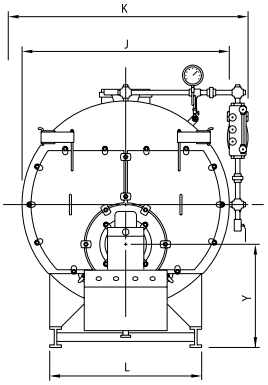

FRONT VIEW

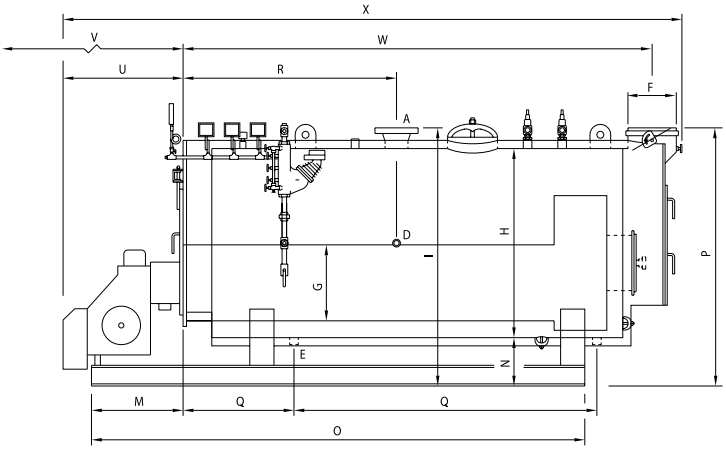

STEAM BOILER

	300	350	400	500	600	700	750	800	900	1000	1200	1500	
	1500	1750	2000	2500	3000	3500	3750	4000	4500	5000	6000	7500	
	10350	12075	13800	17250	20700	24150	25875	27600	31050	34500	41400	51750	
	10043	11716	13390	16738	20085	23432	25106	26780	30128	33475	40170	50213	
	12600	14700	16800	21000	25200	29400	31500	33600	37800	42000	50400	63000	
	138	160	184	230	275	320	344	368	413	460	550	688	
	90	105	120	150	180	210	225	240	2770	300	360	450	
	84	98	112	140	168	196	210	224	252	280	336	420	
A	6	6	6	6	8	8	8	8	8	8	10	10	A
A	10	10	10	10	12	12	12	12	14	14	14	14	A
B	10	10	10	10	12	12	12	12	12	12	14	14	B
C	8	8	8	8	8	10	10	10	12	12	14	14	C
D	2	2	2	2	2 1/2	2 1/2	2 1/2	2 1/2	2 1/2	2 1/2	2 1/2	2 1/2	D
E	1 1/2	1 1/2	1 1/2	1 1/2	1 1/2	2	2	2	2	2	2	2	E
E	2	2	2	2	2	2	2	2	2	2	2	2	E
F	20	20	24	24	28	28	28	30	30	30	32	32	F
G	34	34	38	38	44	52	52	52	52	52	56	56	G
H	84	84	90	96	102	112	112	112	112	112	126	136	H
I	108 3/4	108 3/4	115	121	127	137 1/4	137 1/4	137 1/4	137 1/4	137 1/4	152 1/4	162 1/2	I
J	90 3/4	90 3/4	96 1/4	102 3/4	108 3/4	119	119	119	119	119	133 1/2	144	J
K	103	103	109	115	121	136	136	136	136	136	153	165	K
L	64	64	70	76	78	92	92	92	92	92	108	114	L
M	30 5/8	35 5/8	32 5/8	32 5/8	52 5/8	35 1/8	34 5/8	36 5/8	49 5/8	49 5/8	55 5/8	59 1/2	M
N	18	18	18	18	18	18	18	18	18	18	18	18	N
O	180	204	198	212	240	207	218	228	264	288	294	320	O
P	108 3/4	108 3/4	115	122	138 1/4	138 1/4	138 1/4	138 1/4	138 1/4	138 1/4	152 1/4	162 1/2	P
Q	33 7/8-98	39 7/8-110	45 7/8-98	47 7/8-137	46 7/8-137	51 3/8-124	49 7/8-138	49 7/8-148	45 7/8-170	49 7/8-193	53 7/8-189	52 7/8-214	Q
R	69 3/8	82 7/8	91 3/8	96 7/8	96 3/8	90 3/8	90 3/8	101 3/8	122	115 7/8	122 3/8	135 7/8	R
S	50 3/8	53 7/8	55 7/8	58 7/8	60	51 3/8	51 3/8	51 3/8	78	78	74 7/8	65 7/8	S
T	140 3/8	148 7/8	139 7/8	160 7/8	160	140 3/8	140 3/8	153 3/8	180	200	205 7/8	245 7/8	T
U	46	48	54	57	62	62	62	62	67	67	83	83	U
V	150	168	168	184	191	173	184	195	217	239	239	264	V
W	188 7/8	190 7/8	190 7/8	208 7/8	217 5/8	202 3/8	213 7/8	225 7/8	247 7/8	269 7/8	270 7/8	298 7/8	W
X	230	250	260	281	297	282	293	311	311	355	373	401	X
Y	41	41	43 1/2	44 1/4	47 1/2	50 1/4	50 1/4	50 1/4	50 1/4	50 1/4	52 5/8	53	Y
	27100	30200	22000	37900	46400	48100	54100	57200	61300	66400	82000	103000	
	25800	28200	29500	34400	37400	40100	42500	44900	44700	54600	74000	93000	
	1773	2009	2230	2918	3193	3121	3347	3562	3996	4425	5459	6927	
	2176	2461	2790	3627	4058	4043	4330	4605	5157	5706	7568	10205	
	300	350	400	500	600	700	750	800	900	1000	1200	1500	

BOILER DESIGN: Three-Pass "Scotch Marine" Firetube design with stress relieving "Wetback" construction. Pressure designs for steam are:
30-150 HP. > 450 PSI max.
200-300 HP. > 400 PSI max.
400-500 HP. > 350 PSI max.
500-600 HP. > 325 PSI max.
700-1000 HP. > 300 PSI max.
1200-1500 HP. > 250 PSI max.
1600-2000 HP. > 200 PSI max.
Hot Water pressures models are from 30-160 psi. High pressure, high temperature Section I hot water boilers available.
Factory assembled with trim, tested, ASME code, UL, and CSD-1 standards.

STEAM MODEL TRIM: Safety relief valve, operating pressure control, high limit pressure control with manual reset, steam pressure gauge with syphon, combination pump control and low water cut-off with gauge glass assembly and drain valve, auxiliary low water cut-off with manual reset.

HOT WATER MODEL TRIM: Safety relief valve, operating temperature control, high limit temperature control with manual reset, combination pressure & temperature gauge, low water cut-off control with manual reset.

BURNER: Matched UL listed "forced draft" power burners with factory pre-piped, wired and tested fuel configurations for natural gas, propane (LP) gas, No. 2 (diesel) oil, or combination of both gas/oil.

INITIAL VALUES

BOILER

Boiler type	Fire tube
Refractoring type	Straight
Boiler capacity (Gas)	23.4 MMBTU/h
Boiler efficiency (Gas)	84 % (HHV)
Furnace back pressure (Gas)	3.0 "W.C.
Boiler capacity (Oil)	23.4 MMBTU/h
Boiler efficiency (Oil)	84 % (HHV)
Furnace back pressure (Oil)	3.0 "W.C.
Furnace mean diameter	48.0 "
Furnace length	205.0 "
Medium type	water
Max medium temperature	212 °F

GAS FUEL

Gas type	Natural gas
Lower heating value	960 BTU/scf
Higher heating value	1066 BTU/scf
Gas density	0.046 lb/scf
Supply pressure	0.0 psi
Supply temperature	50 °F

OIL FUEL

Oil type	Fuel Oil No.2
Density	53 lb/ft³
Lower heating value	130222 BTU/gal
Higher heating value	144525 BTU/gal
Reference viscosity	6 mm²/s
Reference temperature	68 °F
Oil supply pressure	0.0 psi

AMBIENT CONDITIONS

Ambient temperature	68 °F
Relative humidity	50 %
Altitude	279 ft
Combustion air temperature	68 °F

This document is intended only to the recipients and it may contain information that is privileged, confidential or otherwise protected from disclosure. Any review, publication, dissemination, copying or use of this document or its contents by persons other than recipients is strictly prohibited, unless prior authorization is received from Oilon.
ID 202,749 2021.02.01-1118

FLUE GAS RECIRCULATION (FGR)

Normalized FGR flow	18463 SCFH
Actual FGR flow	28892 CFH (320 °F, 279 ft)
Minimum FGR pipe inner diameter	6 "

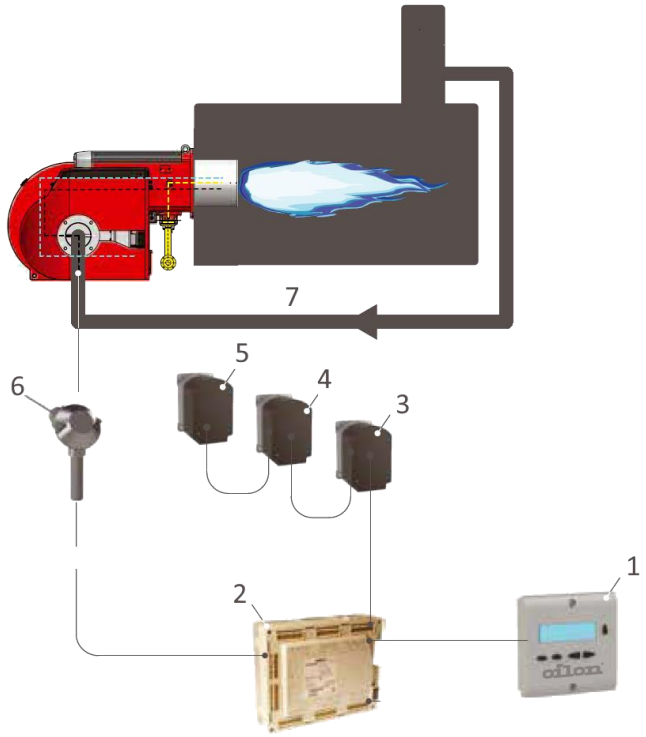

1 - User interface
2 - Control unit
3 - Gas damper
4 - Air damper
5 - Flue gas valve
6 - Temperature sensor (option)
7 - Recirculation pipe

The instruments and devices included in this quotation - if any - are listed separately on page 2.

This document is intended only to the recipients and it may contain information that is privileged, confidential or otherwise protected from disclosure. Any review, publication, dissemination, copying or use of this document or its contents by persons other than recipients is strictly prohibited, unless prior authorization is received from Oilon.
ID 202,749 2021.02.01-1118

EMISSIONS

Emission levels for Natural gas combustion - not a guarantee

Estimated nitrogen oxides NO_x	29 ppm ± 8 % ref. 3 % O2 (dry)
Required FGR rate	6 %
Carbon monoxide CO	ref. 3 % O2 (dry)

Emission levels for Light fuel oil combustion - not a guarantee

Estimated nitrogen oxides NO_x	97 ppm ± 8 % ref. 3 % O2 (dry)
Carbon monoxide CO	ref. 3 % O2 (dry)

The emission values are based on the process values mentioned in the quotation and the following conditions:

A) Technical specifications

A.1) Oilon has approved the burner positioning in the boiler.
A.2) Oilon has approved the combustion air duct design.
A.3) The boiler is according to the drawing number TBD.
A.4) The boiler structure and flue gas duct must be gas tight.
A.5) The boiler contains no refractory, except burner refractory.
A.6) Emission values are valid only for stable operation.
A.7) Burners are adjusted by professional burner personnel and process automation and instrumentation are operating correctly.

B) Fuel specifications

Gas specification

B.1) The fuel is according to the inquiry specification N/A
B.2) Additional specifications.

Oil specification

B.3) The fuel is according to the inquiry specification N/A
B.4) The fuel oil nitrogen content is 0.014 m-% or lower.
B.5) Additional specifications.

C) Calculation and measurement specifications

C.1) Combustion product concentrations are given in dry flue gas.
C.2) m^3n refers to standard conditions as defined in 0 °C and 101325 Pa.
C.3) Measurement uncertainty margins are considered in favour of the burner manufacturer.
C.4) Emission measurements are conducted according to EN 13284-1 standard and corrected to standard conditions (Tair = 20 °C and humidity 10 gH2O/kgair) according to standard EN676 (Annex G).

This document is intended only to the recipients and it may contain information that is privileged, confidential or otherwise protected from disclosure. Any review, publication, dissemination, copying or use of this document or its contents by persons other than recipients is strictly prohibited, unless prior authorization is received from Oilon.
ID 202,749 2021.02.01-1118

ITEM	MAJOR COMPONENTS
1	CONTROL PANEL
2	ENTRANCE BOX
3	BLOWER MOTOR 75 HP
4	N/A
5	COMBUSTION SAFEGUARD CONTROL – FIREYE E110
6	FLAME SCANNER – INFRARED
7	PRESSURE CONTROL – OPERATING
8	PRESSURE CONTROL – HIGH LIMIT
9	PRESSURE CONTROL – MODULATING
10	WATER COLUMN – McDONNELL MILLER #193-7B
11	AUXILIARY LOW WATER CUTOFF – McDONNELL MILLER #150 MANUAL RESET FUNCTION
12	STEAM GAUGE
13	N/A
14	STACK THERMOMETER
15	SAFETY VALVE – (4) SET AT 30# KUNKLE #6232 (SHIPPED LOOSE)
16	GAS TRAIN SEE DETAIL
17	N/A
18	N/A
19	MANWAY 12 X 16
20	N/A
21	N/A
22	HANDHOLES (6) 3.25 X 4.5
23	FRONT SIGHT PORT
24	REAR SIGHT PORT
25	BURNER HIGH TURN DOWN
26	ALARM 4" DIA
27	MINIMUM TEMPERATURE/LOW FIRE HOLD CONTROL
28	N/A
29	N/A

ITEM	SERVICE CONNECTIONS
A	ELECTRIC–MAIN POWER SUPPLY 460/3/60
B	N/A
C	EXHAUST VENT PIPE 24" OD
D	VENT FLANGE (SEE DETAIL)
E	STEAM OUTLET – 12" 300# RF FLANGE
F	N/A
G	N/A
H	FEED WATER (2) 2.5 NPS
I	BLOWDOWN/DRAIN (2) 2.0 NPS
J	WATER COLUMN BLOWDOWN – 0.75 NPS
K	GAUGE GLASS BLOWDOWN – 0.25 NPS
L	SURFACE BLOWOFF – 1.0 NPS (WITH COLLECTOR PIPE)
M	PILOT GAS – 0.5 NPS
N	MAIN GAS – 4" 150# FF FLANGE
O	MINIMUM GAS PRESSURE REQUIRED IS 78.0" WC DOWNSTREAM OF THE PRESSURE REGULATOR
P	N/A
Q	N/A
R	CHEMICAL FEED – 1.0 NPS
S	SAFETY VALVE – (3) 4.0 NPS OUTLET
T	SAFETY VALVE – (1) 3.0 NPS OUTLET

BOILER SPECIFICATIONS

BOILER DESIGNATION	CB700-700
HORSEPOWER	700
FUEL	(3) GAS
DESIGN PRESSURE	150# STEAM
STEAM CAPACITY	– 24150# STM/HR @ 212°F
DRY WEIGHT	52000 LB
WATER WEIGHT	– 23000 LB

BOILER CLEARANCES

THE REAR DOOR IS DAMTED

MINIMUM CLEARANCES FOR:
FRONT TUBE REMOVAL 18'-10"
REAR TUBE REMOVAL 18'-1"

BASE RAILS

FRONT DOOR SWING 9'-0"
(MEASUREMENT FROM FRONT FLANGE)

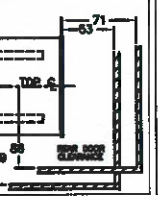

NOTES

BOILER IS DESIGNED AND CONSTRUCTED IN ACCORDANCE WITH THE ASME BOILER AND PRESSURE VESSEL CODE: SECTION I POWER BOILER

THE BOILER–BURNER PACKAGE HAS A UL LABEL.

THIS UNIT COMPLIES WITH INSURANCE UNDERWRITERS REQUIREMENTS FOR: INDUSTRIAL RISK INSURERS

THE BOILER PACKAGE IS PAINTED WITH HIGH TEMPERATURE LIGHT BLUE ENAMEL.

BOILER HAS 2" BLANKET INSULATION, COVERED WITH SECTIONAL SHEET METAL LAGGING

THIS IS A LOW EMISSION BOILER

THE BURNER, INTEGRAL WITH FRONT HEAD, IS A:
HIGH RADIANT MULTI–PORT TYPE
FOR GAS FIRING

THE BURNER OPERATION IS:
FULL MODULATING

CONTROL CIRCUIT TRANSFORMER PROVIDED

DIMENSIONS ARE IN INCHES UNLESS OTHERWISE NOTED

THE DIMENSIONS SHOWN ON THIS DIAGRAM ARE APPROXIMATE AND SHOULD NOT BE USED TO DETERMINE PRE–FABRICATED ASSEMBLIES, UNLESS CERTIFIED.

SHIP LOOSE ITEMS

THESE ITEMS ARE SHIPPED LOOSE FOR INSTALLATION BY OTHERS

BLOWDOWN VALVE – UNITED BRASS 225–UT 2.0 NPS (1) SLOW
BLOWDOWN VALVE – LUNKENHEIMER FIG 102 2.0 NPS (2) QUICK
GAS PRESSURE REGULATOR FISHER 1098 EGR 2" FLANGE (1)

ADDITIONAL NOTES

BASE RAILS HAVE WELDED END CAPS
COMBUSTION CONTROL INCLUDES EXPANDED ANNUNCIATOR
SEISMIC DESIGN – ZONE 2
TEFC / HIGH EFFICIENCY /1.15 SF BLOWER MOTOR
VENT ALTERNATION – REINFORCED STUB FOR 3000#
PROVIDED WITH INDUCED FOR 30 PPM SYSTEM

← 30 PPM NOX

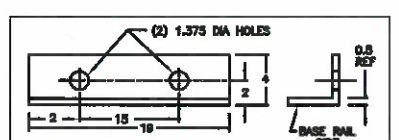

ANCHOR CLIP DETAIL

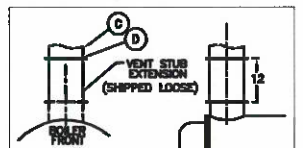

VENT EXTENSION DETAIL

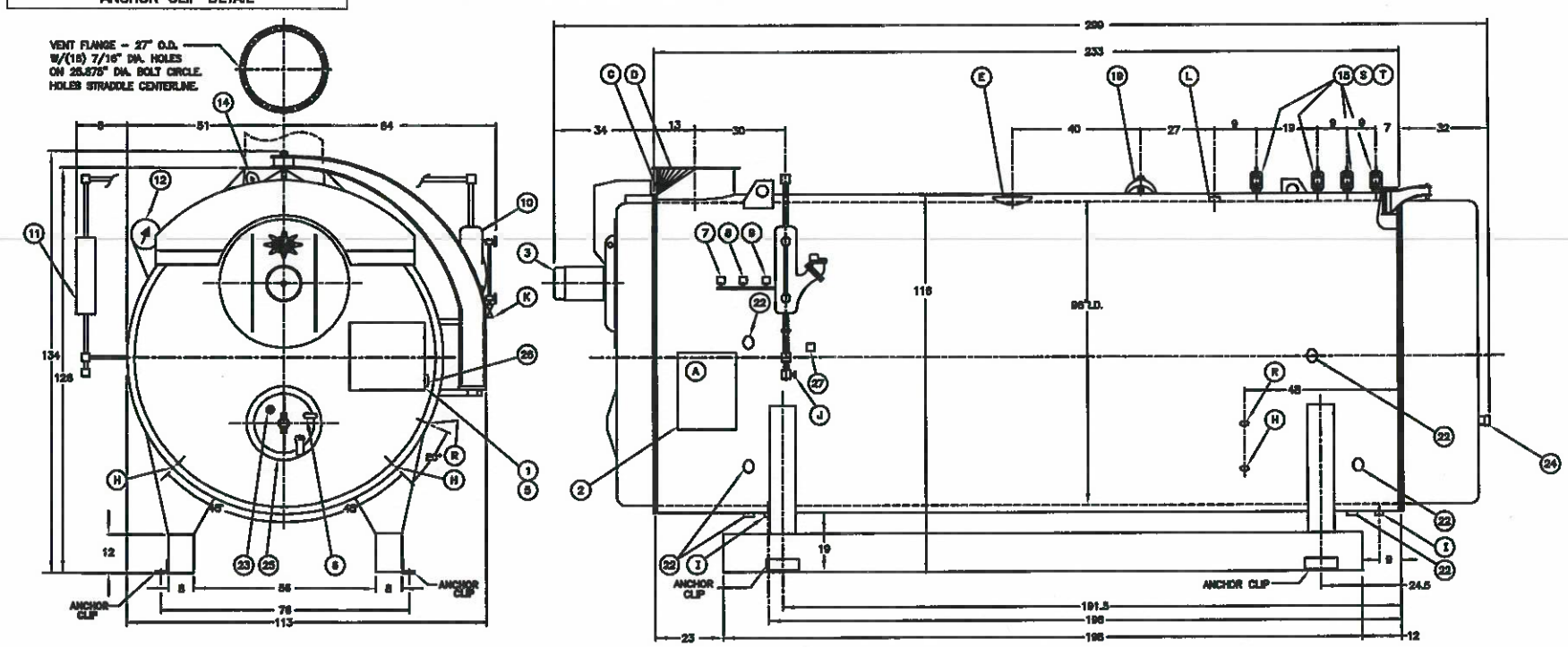

ITEM	REQ	DESCRIPTION
1	4	SHUT OFF COCKS
2	2	MAIN GAS VALVES
3	1	BUTTERFLY VALVE
4	1	GAS PILOT VALVE
5	1	PRESSURE REGULATOR
6	1	PRESSURE GAUGE
7	1	LOW GAS PRESSURE SWITCH *
8	1	HIGH GAS PRESSURE SWITCH *
9	1	VENT VALVE – 2.0 NPS *

GAS TRAIN SCHEMATIC

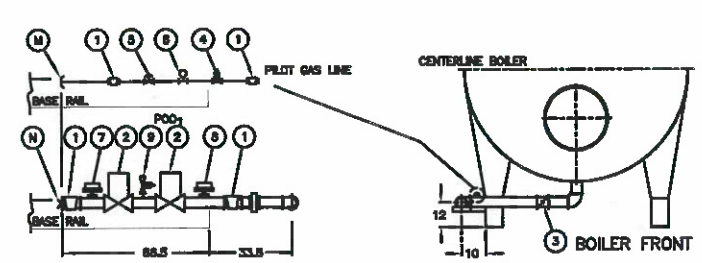

* TO BE VENTED TO POINT OF SAFE DISCHARGE

THIS DRAWING IS PROPERTY OF CLEAVER–BROOKS DIVISION
IT IS SUBJECT TO CHANGE WITHOUT NOTICE, AND IS NOT TO BE COPIED OR USED IN ANY WAY DETRIMENTAL TO THE COMPANY.

REVISIONS

WARNING: Changes, modifications or alterations are strictly prohibited. Changes to this drawing and subsequent modification of equipment could result in damage to the equipment and/or serious personal injury.

OL100468

PHILIPS 100K EXPANSION
ALBUQUERQUE NM
CU0001074–010 *LOW EMISSION*
DIMENSION DIAGRAM

12 SHT 01 OF 01

SCALE N.T.S. DATE 06–12–00 DRAWN B.A. SIZE D

Cleaver-Brooks

CB	700	700	150ST
460	3	60	3

WARRANTY IRI

DRWG. NO. OL100468DD 00

7 6 5 4 3 2 1

CONTROL PANEL TERMINALS
1,2,4,4,5,6,9,11,14,15,16,17,18,19,20,21,22,23,25,26,27,29,30,33,38,
57,58,59,60,63,64,65,66,70

JUMPER TERMINAL–4–4,5–5–5,9–11,14–15,

ENTRANCE BOX TERMINALS
LL1,LL2,LL3 GR
2,4,4,5,6,9,11,15,16,17,18,19,20,22,23,24,27,30,33,34,38,
47,48,49,55,56,57,58,59,61,62,64,65,66,68,69,70

JUMPER TERMINALS–4–4,5–5–5,

ENTRANCE BOX EXTERNAL CONNNECTIONS

DEVICE	FROM TERMINALS
MAIN POWER SUPPLY	LL1,LL2,LL3
REMOTE START/STOP *	23,56
REMOTE ALARM *	61,62
FEED WATER SYSTEM *	47,48,49
4–20 ma PROPORTIONAL SIGNAL *	65,66

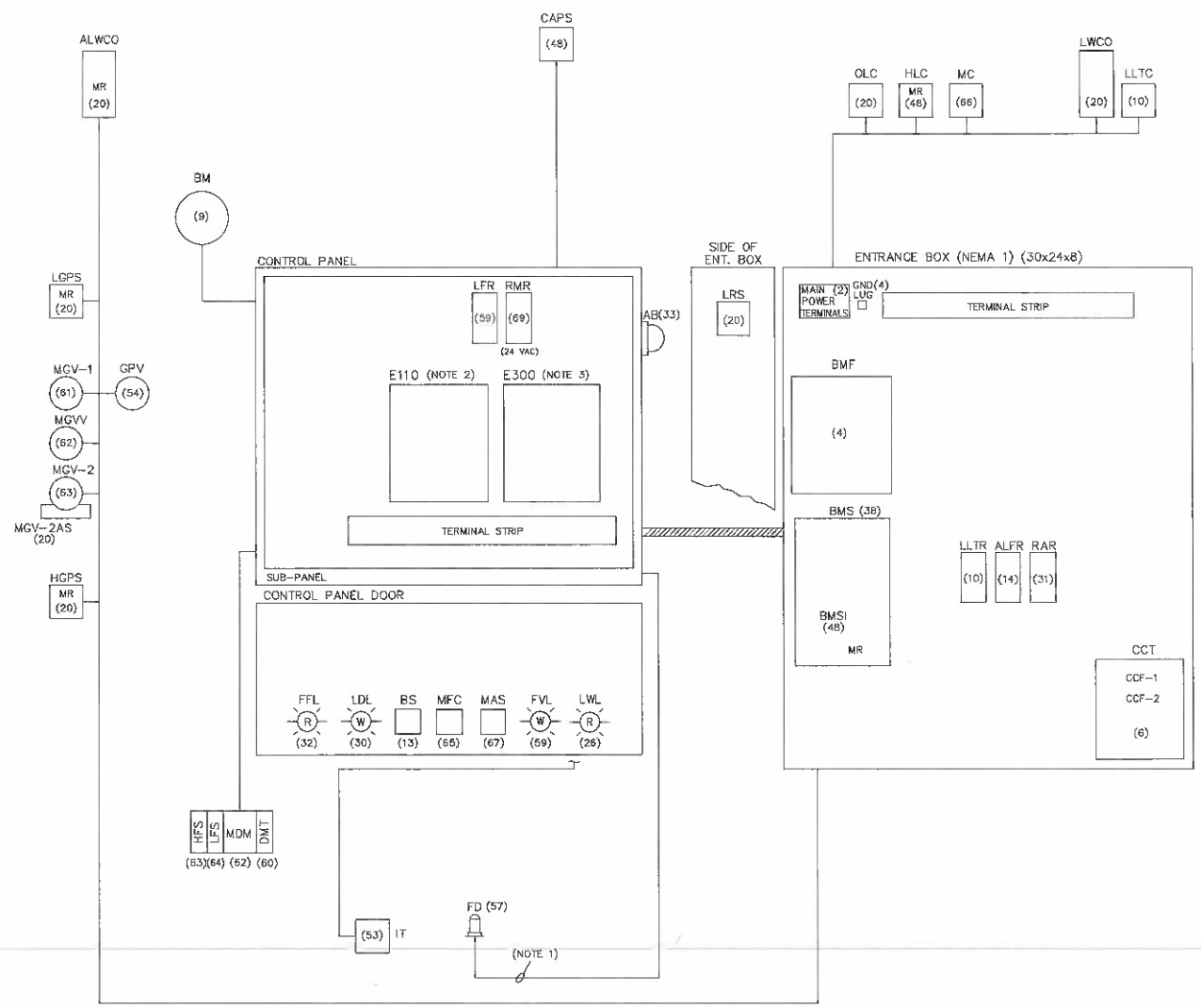

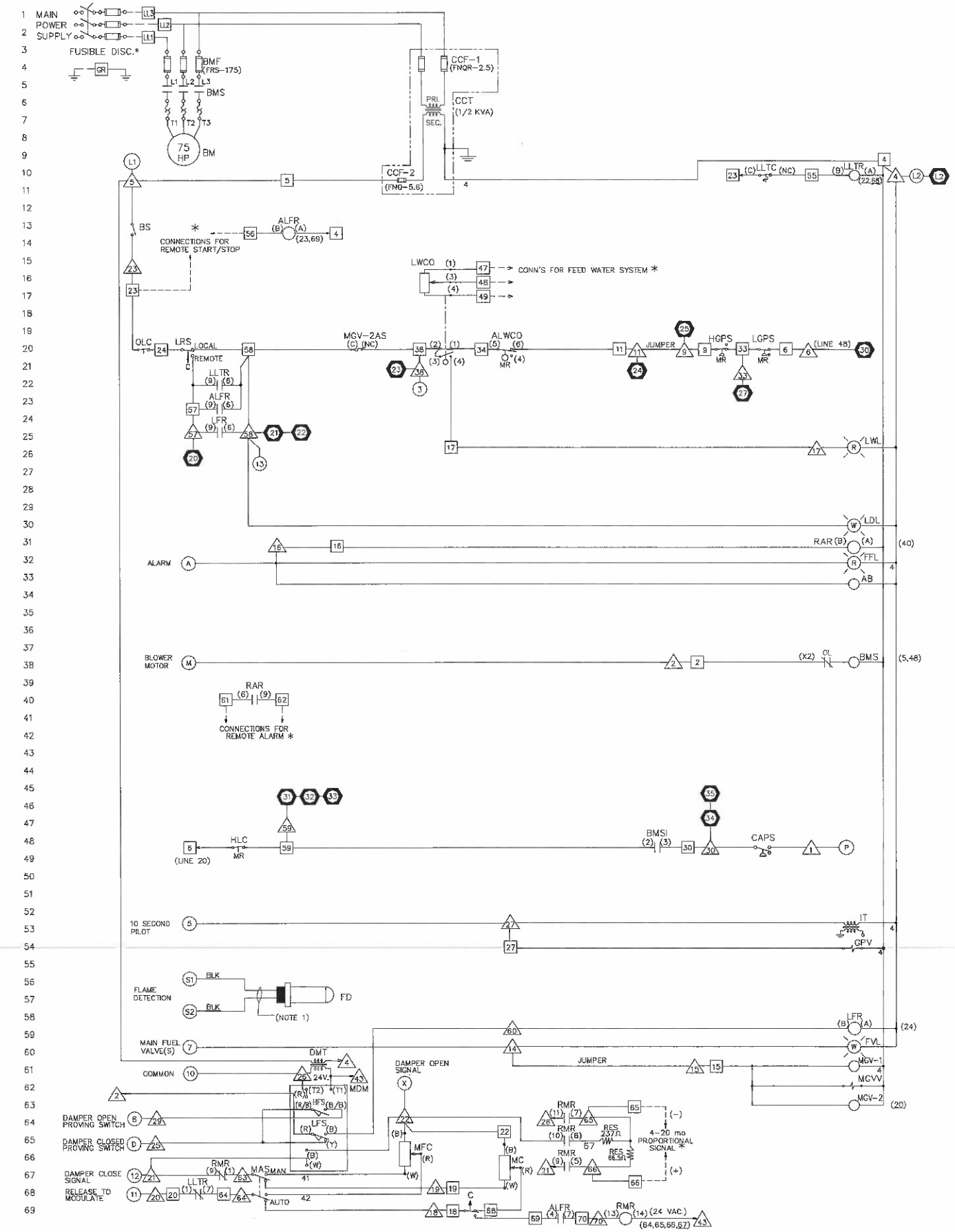

LEFT SIDE — FRONT OF BOILER — RIGHT SIDE

BLOCK SYMBOLS

BLOCK SHOWS RELATIVE POSITION OF DEVICES.

( ) SHOWS LINE NO. THAT THE DEVICE APPEARS ON, IN THE SCHEMATIC.

SCHEMATIC SYMBOLS

- △ DENOTES CONTROL PANEL TERMINAL
- ☐ DENOTES ENTRANCE BOX TERMINAL
- ( ) DENOTES TERMINAL DESIGNATION ON DEVICE
- ○ DENOTES PROGRAM RELAY E110 TERMINAL
- ⬡ DENOTES PROGRAM RELAY E300 TERMINAL
- * CLEAVER-BROOKS DIVISION DOES NOT FURNISH

NOTES

NOTE 1– DETECTOR LEADS MUST BE RUN IN A SEPARATE CONDUIT.

NOTE 2– FOR FURTHER INFORMATION REGARDING PROGRAM RELAY SEE FORM E1101.

NOTE 3– FOR FURTHER INFORMATION REGARDING FIREYE ANNUNCIATOR SEE FORM E3001.

ALL CONTROL SWITCHES ARE SHOWN IN THEIR NORMAL OPERATING POSITION. THE BURNER SEQUENCE IS OFF AND IN THE READY STATE, WITH THE BURNER SWITCH (BS) OPEN.

115 V. WIRE IS #14 AWG UNLESS OTHERWISE NOTED

WATER COLUMN WIRING SHALL BE RATED 200° C.

WIRING SHOWN BY BROKEN LINES IS NOT FURNISHED BY CLEAVER–BROOKS DIVISION.

SEE FORM C23–3862 FOR MEANING OF ABBREVIATED DEVICES ADDITIONAL DEVICES AS FOLLOWS:

THIS DRAWING IS PROPERTY OF CLEAVER–BROOKS DIVISION
IT IS SUBJECT TO CHANGE WITHOUT NOTICE, AND IS NOT TO BE COPIED OR USED IN ANY WAY DETRIMENTAL TO THE COMPANY.

REVISIONS
REV.1 HFS TO MDM WAS WIRED FROM PILOT. –RAK– 10/30/00

–THIS IS A LOW EMISSION BOILER–

WARNING: Changes, modifications or alterations are strictly prohibited. Changes to this drawing and subsequent modification of equipment could result in damage to the equipment and/or serious personal injury.

OL100468

PHILIPS 100K EXPANSION
ALBUQUERQUE NM
CU0001074–010
WIRING DIAGRAM

12A 6T SHT 01 OF 01

SCALE N.T.S.
DATE 9/9/00
DRAWN DER
SIZE D

Cleaver-Brooks® DIV., AQUA-CHEM INC. MILWAUKEE, WISCONSIN GREENVILLE, MS STRATFORD, CNT THOMASVILLE, GA

CB MODEL	700 FIRE	700 SIZE	150ST PRESSURE	IRI INSURANCE
460 VOLTS	3 PHASE	60 HERTZ	3 WIRE	121.5 MIN CIRCUIT AMPS

DRWG. NO. OL100468WD 01

3.4 Large Stationary Diesel And All Stationary Dual-fuel Engines

3.4.1 General

The primary domestic use of large stationary diesel engines (greater than 600 horsepower [hp]) is in oil and gas exploration and production. These engines, in groups of 3 to 5, supply mechanical power to operate drilling (rotary table), mud pumping, and hoisting equipment, and may also operate pumps or auxiliary power generators. Another frequent application of large stationary diesels is electricity generation for both base and standby service. Smaller uses include irrigation, hoisting, and nuclear power plant emergency cooling water pump operation.

Dual-fuel engines were developed to obtain compression ignition performance and the economy of natural gas, using a minimum of 5 to 6 percent diesel fuel to ignite the natural gas. Large dual-fuel engines have been used almost exclusively for prime electric power generation. This section includes all dual-fuel engines.

3.4.2 Process Description

All reciprocating internal combustion (IC) engines operate by the same basic process. A combustible mixture is first compressed in a small volume between the head of a piston and its surrounding cylinder. The mixture is then ignited, and the resulting high-pressure products of combustion push the piston through the cylinder. This movement is converted from linear to rotary motion by a crankshaft. The piston returns, pushing out exhaust gases, and the cycle is repeated.

There are 2 ignition methods used in stationary reciprocating IC engines, compression ignition (CI) and spark ignition (SI). In CI engines, combustion air is first compression heated in the cylinder, and diesel fuel oil is then injected into the hot air. Ignition is spontaneous because the air temperature is above the autoignition temperature of the fuel. SI engines initiate combustion by the spark of an electrical discharge. Usually the fuel is mixed with the air in a carburetor (for gasoline) or at the intake valve (for natural gas), but occasionally the fuel is injected into the compressed air in the cylinder. Although all diesel- fueled engines are compression ignited and all gasoline- and gas-fueled engines are spark ignited, gas can be used in a CI engine if a small amount of diesel fuel is injected into the compressed gas/air mixture to burn any mixture ratio of gas and diesel oil (hence the name dual fuel), from 6 to 100 percent diesel oil.

CI engines usually operate at a higher compression ratio (ratio of cylinder volume when the piston is at the bottom of its stroke to the volume when it is at the top) than SI engines because fuel is not present during compression; hence there is no danger of premature autoignition. Since engine thermal efficiency rises with increasing pressure ratio (and pressure ratio varies directly with compression ratio), CI engines are more efficient than SI engines. This increased efficiency is gained at the expense of poorer response to load changes and a heavier structure to withstand the higher pressures.[1]

3.4.3 Emissions And Controls

Most of the pollutants from IC engines are emitted through the exhaust. However, some total organic compounds (TOC) escape from the crankcase as a result of blowby (gases that are vented from the oil pan after they have escaped from the cylinder past the piston rings) and from the fuel tank

Table 3.4-1. GASEOUS EMISSION FACTORS FOR LARGE STATIONARY DIESEL AND ALL STATIONARY DUAL-FUEL ENGINES[a]

Pollutant	Diesel Fuel (SCC 2-02-004-01)			Dual Fuel[b] (SCC 2-02-004-02)		
	Emission Factor (lb/hp-hr) (power output)	Emission Factor (lb/MMBtu) (fuel input)	EMISSION FACTOR RATING	Emission Factor (lb/hp-hr) (power output)	Emission Factor (lb/MMBtu) (fuel input)	EMISSION FACTOR RATING
NO_x						
Uncontrolled	0.024	3.2	B	0.018	2.7	D
Controlled	0.013[c]	1.9[c]	B	ND	ND	NA
CO	5.5 E-03	0.85	C	7.5 E-03	1.16	D
SO_x[d]	8.09 E-03S_1	1.01S_1	B	4.06 E-04S_1 + 9.57 E-03S_2	0.05S_1 + 0.895S_2	B
CO_2[e]	1.16	165	B	0.772	110	B
PM	0.0007[c]	0.1[c]	B	ND	ND	NA
TOC (as CH_4)	7.05 E-04	0.09	C	5.29 E-03	0.8	D
Methane	f	f	E	3.97 E-03	0.6	E
Nonmethane	f	f	E	1.32 E-03	0.2[g]	E

[a] Based on uncontrolled levels for each fuel, from References 2,6-7. When necessary, the average heating value of diesel was assumed to be 19,300 Btu/lb with a density of 7.1 lb/gallon. The power output and fuel input values were averaged independently from each other, because of the use of actual brake-specific fuel consumption (BSFC) values for each data point and of the use of data possibly sufficient to calculate only 1 of the 2 emission factors (e. g., enough information to calculate lb/MMBtu, but not lb/hp-hr). Factors are based on averages across all manufacturers and duty cycles. The actual emissions from a particular engine or manufacturer could vary considerably from these levels. To convert from lb/hp-hr to kg/kw-hr, multiply by 0.608. To convert from lb/MMBtu to ng/J, multiply by 430. SCC = Source Classification Code.

[b] Dual fuel assumes 95% natural gas and 5% diesel fuel.

[c] References 8-26. Controlled NO_x is by ignition timing retard.

[d] Assumes that all sulfur in the fuel is converted to SO_2. S_1 = % sulfur in fuel oil; S_2 = % sulfur in natural gas. For example, if sulfer content is 1.5%, then S = 1.5.

[e] Assumes 100% conversion of carbon in fuel to CO_2 with 87 weight % carbon in diesel, 70 weight % carbon in natural gas, dual-fuel mixture of 5% diesel with 95% natural gas, average BSFC of 7,000 Btu/hp-hr, diesel heating value of 19,300 Btu/lb, and natural gas heating value of 1050 Btu/scf.

[f] Based on data from 1 engine, TOC is by weight 9% methane and 91% nonmethane.

[g] Assumes that nonmethane organic compounds are 25% of TOC emissions from dual-fuel engines. Molecular weight of nonmethane gas stream is assumed to be that of methane.

Table 3.4-2. PARTICULATE AND PARTICLE-SIZING EMISSION FACTORS FOR LARGE UNCONTROLLED STATIONARY DIESEL ENGINES[a]

EMISSION FACTOR RATING: E

Pollutant	Emission Factor (lb/MMBtu) (fuel input)
Filterable particulate[b]	
< 1 µm	0.0478
< 3 µm	0.0479
< 10 µm	0.0496
Total filterable particulate	0.0620
Condensable particulate	0.0077
Total PM-10[c]	0.0573
Total particulate[d]	0.0697

[a] Based on 1 uncontrolled diesel engine from Reference 6. Source Classification Code 2-02-004-01. The data for the particulate emissions were collected using Method 5, and the particle size distributions were collected using a Source Assessment Sampling System. To convert from lb/MMBtu to ng/J, multiply by 430. PM-10 = particulate matter ≤ 10 micrometers (µm) aerometric diameter.

[b] Particle size is expressed as aerodynamic diameter.

[c] Total PM-10 is the sum of filterable particulate less than 10 µm aerodynamic diameter and condensable particulate.

[d] Total particulate is the sum of the total filterable particulate and condensable particulate.

Table 3.4-3. SPECIATED ORGANIC COMPOUND EMISSION FACTORS FOR LARGE UNCONTROLLED STATIONARY DIESEL ENGINES[a]

EMISSION FACTOR RATING: E

Pollutant	Emission Factor (lb/MMBtu) (fuel input)
Benzene[b]	7.76 E-04
Toluene[b]	2.81 E-04
Xylenes[b]	1.93 E-04
Propylene	2.79 E-03
Formaldehyde[b]	7.89 E-05
Acetaldehyde[b]	2.52 E-05
Acrolein[b]	7.88 E-06

[a]Based on 1 uncontrolled diesel engine from Reference 7. Source Classification Code 2-02-004-01. Not enough information to calculate the output-specific emission factors of lb/hp-hr. To convert from lb/MMBtu to ng/J, multiply by 430.
[b]Hazardous air pollutant listed in the *Clean Air Act*.

Table 3.4-4. PAH EMISSION FACTORS FOR LARGE UNCONTROLLED STATIONARY DIESEL ENGINES[a]

EMISSION FACTOR RATING: E

PAH	Emission Factor (lb/MMBtu) (fuel input)
Naphthalene[b]	1.30 E-04
Acenaphthylene	9.23 E-06
Acenaphthene	4.68 E-06
Fluorene	1.28 E-05
Phenanthrene	4.08 E-05
Anthracene	1.23 E-06
Fluoranthene	4.03 E-06
Pyrene	3.71 E-06
Benz(a)anthracene	6.22 E-07
Chrysene	1.53 E-06
Benzo(b)fluoranthene	1.11 E-06
Benzo(k)fluoranthene	<2.18 E-07
Benzo(a)pyrene	<2.57 E-07
Indeno(1,2,3-cd)pyrene	<4.14 E-07
Dibenz(a,h)anthracene	<3.46 E-07
Benzo(g,h,l)perylene	<5.56 E-07
TOTAL PAH	<2.12 E-04

[a] Based on 1 uncontrolled diesel engine from Reference 7. Source Classification Code 2-02-004-01. Not enough information to calculate the output-specific emission factors of lb/hp-hr. To convert from lb/MMBtu to ng/J, multiply by 430.

[b] Hazardous air pollutant listed in the *Clean Air Act*.

diesel-cycle and otto-cycle operation. Regulating power by controlling the fuel supply in lieu of a throttle corresponds with lean combustion and diesel-cycle operation. This language allows the possibility that a natural gas-fueled engine equipped with a spark plug is considered a compression-ignition engine.

Tier 1-3 Emission Standards

The 1998 nonroad engine regulations were structured as a 3-tiered progression. Each tier involved a phase-in (by horsepower rating) over several years. Tier 1 standards were phased-in from 1996 to 2000. The more stringent Tier 2 standards took effect from 2001 to 2006, and yet more stringent Tier 3 standards phased-in from 2006 to 2008 (Tier 3 standards applied only for engines from 37-560 kW).

Tier 1-3 emissions standards are listed in Table 1. Nonroad regulations use the metric system of units, with regulatory limits expressed in grams of pollutant per kWh.

Table 1
EPA Tier 1-3 Nonroad Diesel Engine Emission Standards, g/kWh (g/bhp·hr)

Engine Power	Tier	Year	CO	HC	NMHC+NOx	NOx	PM
kW < 8 (hp < 11)	Tier 1	2000	8.0 (6.0)	-	10.5 (7.8)	-	1.0 (0.75)
	Tier 2	2005	8.0 (6.0)	-	7.5 (5.6)	-	0.8 (0.6)
8 ≤ kW < 19 (11 ≤ hp < 25)	Tier 1	2000	6.6 (4.9)	-	9.5 (7.1)	-	0.8 (0.6)
	Tier 2	2005	6.6 (4.9)	-	7.5 (5.6)	-	0.8 (0.6)
19≤ kW < 37 (25 ≤ hp < 50)	Tier 1	1999	5.5 (4.1)	-	9.5 (7.1)	-	0.8 (0.6)
	Tier 2	2004	5.5 (4.1)	-	7.5 (5.6)	-	0.6 (0.45)
37 ≤ kW < 75 (50 ≤ hp < 100)	Tier 1	1998	-	-	-	9.2 (6.9)	-
	Tier 2	2004	5.0 (3.7)	-	7.5 (5.6)	-	0.4 (0.3)
	Tier 3	2008	5.0 (3.7)	-	4.7 (3.5)	-	-†
75 ≤ kW < 130 (100 ≤ hp < 175)	Tier 1	1997	-	-	-	9.2 (6.9)	-
	Tier 2	2003	5.0 (3.7)	-	6.6 (4.9)	-	0.3 (0.22)
	Tier 3	2007	5.0 (3.7)	-	4.0 (3.0)	-	-†
130 ≤ kW < 225 (175 ≤ hp < 300)	Tier 1	1996	11.4 (8.5)	1.3 (1.0)	-	9.2 (6.9)	0.54 (0.4)
	Tier 2	2003	3.5 (2.6)	-	6.6 (4.9)	-	0.2 (0.15)
	Tier 3	2006	3.5 (2.6)	-	4.0 (3.0)	-	-†
225 ≤ kW < 450 (300 ≤ hp < 600)	Tier 1	1996	11.4 (8.5)	1.3 (1.0)	-	9.2 (6.9)	0.54 (0.4)
	Tier 2	2001	3.5 (2.6)	-	6.4 (4.8)	-	0.2 (0.15)
	Tier 3	2006	3.5 (2.6)	-	4.0 (3.0)	-	-†
450 ≤ kW < 560 (600 ≤ hp < 750)	Tier 1	1996	11.4 (8.5)	1.3 (1.0)	-	9.2 (6.9)	0.54 (0.4)
	Tier 2	2002	3.5 (2.6)	-	6.4 (4.8)	-	0.2 (0.15)
	Tier 3	2006	3.5 (2.6)	-	4.0 (3.0)	-	-†
kW ≥ 560 (hp ≥ 750)	Tier 1	2000	11.4 (8.5)	1.3 (1.0)	-	9.2 (6.9)	0.54 (0.4)
	Tier 2	2006	3.5 (2.6)	-	6.4 (4.8)	-	0.2 (0.15)

† Not adopted, engines must meet Tier 2 PM standard.

Policy: CARB Emission Factors for CI Diesel Engines – Percent HC in Relation to NMHC + NOx

Policy

When the non-methane hydrocarbon (NMHC) and nitrogen oxide (NOx) emission factor is combined, assume a breakdown of 5% and 95%, respectively.

Effective date

June 28, 2004

Definitions

The following is a list of associated definitions.

- ***CI Engine*** – Compression Ignition Engine is an internal combustion engine with operating characteristics significantly similar to the theoretical diesel combustion cycle.
- ***HC*** – Organic compound consistently entirely of hydrogen and carbon.
- ***NMHC*** – Non-Methane Hydrocarbon is the sum of all hydrocarbon air pollutants except methane.
- ***NOx*** – Nitrogen Oxides are compounds of nitric oxide (NO), nitrogen dioxide (NO_2), and other oxides of nitrogen, which are typically created during combustion processes.

Contact

Randy Frazier, x4672

Document Control

Version	Revised By	Description	Date
1.1	HL	New Policy: CARB Emission Factors – Percent HC in Relation to NMHC + NOx	06/28/04
1.2	MCL	Mapping of Policy	3/13/08

Approval

Name & Title	Signature	Date
Brian Bateman, Director of Engineering	**Signed by Brian Bateman**	2/28/2008

II.A-C: Summary of Results, Runs 1-3
(Unit EG-1A, Test Summary)
Operational Data, Concentrations, Exhaust Flow Rates, Mass Emission Rates

Client: University of New Mexico Hospital
Plant Name: Main Hospital Power Plant
Plant Location: Albuquerque, NM
Sampling Location: Unit #EG-1A Exhaust Stack
Date: 06/03/2014
Technicians: RC/JCC

Test Number	***1***	***2***	***3***	
Load Condition	91%	91%	91%	
Date	6/03/14	6/03/14	6/03/14	
Start Time	10:55 AM	12:15 PM	1:30 PM	
Stop Time	11:55 AM	1:15 PM	2:30 PM	
Engine/Generator Operation				
Engine Speed, rpm	1800.0	1800.0	1800.0	
Power, kW	1092.0	1092.0	1092.0	
Current, A	1330.0	1336.0	1336.0	
Voltage, V	471.0	471.0	471.0	
Frequency, hz	60.0	60.0	60.0	
Measured Emissions (dry) (corrected for instrument drift)				**Averages**
NOx (ppmv)	743.39	715.49	709.57	**722.82**
CO (ppmv)	156.05	165.21	182.52	**167.93**
O2 (%)	10.67	10.82	10.73	**10.74**
CO2 (%)	7.92	7.91	7.91	**7.91**
Exhaust Flow Rates				
via EPA Methods 1-4 (SCFH, dry)	2.45E+05	2.55E+05	2.45E+05	**2.48E+05**
Mass Emission Rates (Based on Methods 1-4)				
NOx (lbs/hr) {Limit = 22.1}	21.75	21.78	20.76	**21.43**
CO (lbs/hr) {Limit = 11.4}	2.78	3.06	3.25	**3.03**
NOx (tons/yr) {Based on 500 hrs / year}	5.44	5.45	5.19	**5.36**
CO (tons/yr) {Based on 500 hrs / year}	0.69	0.76	0.81	**0.76**

STANDBY 1400 ekW 1750 kVA

60 Hz 1800 rpm 480 Volts

TECHNICAL DATA

Open Generator Set - - 1800 rpm/60 Hz/480 Volts	DM8184	
Low Fuel Consumption		
Generator Set Package Performance		
Genset Power rating @ 0.8 pf	1750 kVA	
Genset Power rating with fan	1400 ekW	
Coolant to aftercooler		
Coolant to aftercooler temp max	90 ° C	194 ° F
Fuel Consumption		
100% load with fan	384.7 L/hr	101.6 Gal/hr
75% load with fan	281.6 L/hr	74.4 Gal/hr
50% load with fan	197.6 L/hr	52.2 Gal/hr
Cooling System[1]		
Air flow restriction (system)	0.12 kPa	0.48 in. water
Air flow (max @ rated speed for radiator arrangement)	1671 m³/min	59011 cfm
Engine Coolant capacity with radiator/exp. tank	305.8 L	80.8 gal
Engine coolant capacity	156.8 L	41.4 gal
Radiator coolant capacity	149.0 L	39.4 gal
Inlet Air		
Combustion air inlet flow rate	122.4 m³/min	4322.5 cfm
Exhaust System		
Exhaust stack gas temperature	485.0 ° C	905.0 ° F
Exhaust gas flow rate	327.2 m³/min	11555.0 cfm
Exhaust flange size (internal diameter)	203.2 mm	8.0 in
Exhaust system backpressure (maximum allowable)	6.7 kPa	26.9 in. water
Heat Rejection		
Heat rejection to coolant (total)	635 kW	36112 Btu/min
Heat rejection to exhaust (total)	1468 kW	83485 Btu/min
Heat rejection to aftercooler	315 kW	17914 Btu/min
Heat rejection to atmosphere from engine	147 kW	8360 Btu/min
Heat rejection to atmosphere from generator	72.1 kW	4100.3 Btu/min
Alternator[2]		
Motor starting capability @ 30% voltage dip	3673 skVA	
Frame	1445	
Temperature Rise	150 ° C	270 ° F
Lube System		
Sump refill with filter	310.4 L	82.0 gal
Emissions (Nominal)[3]		
NOx g/hp-hr	9.55 g/hp-hr	
CO g/hp-hr	1.44 g/hp-hr	
HC g/hp-hr	.42 g/hp-hr	
PM g/hp-hr	.097 g/hp-hr	

[1] For ambient and altitude capabilities consult your Cat dealer. Air flow restriction (system) is added to existing restriction from factory.
[2] UL 2200 Listed packages may have oversized generators with a different temperature rise and motor starting characteristics. Generator temperature rise is based on a 40 degree C ambient per NEMA MG1-32.
[3] Emissions data measurement procedures are consistent with those described in EPA CFR 40 Part 89, Subpart D & E and ISO8178-1 for measuring HC, CO, PM, NOx. Data shown is based on steady state operating conditions of 77°F, 28.42 in HG and number 2 diesel fuel with 35° API and LHV of 18,390 btu/lb. The nominal emissions data shown is subject to instrumentation, measurement, facility and engine to engine variations. Emissions data is based on 100% load and thus cannot be used to compare to EPA regulations which use values based on a weighted cycle.

PERFORMANCE DATA[EM1898]

August 31, 2018

Performance Number: EM1898 **Change Level: 00**

SALES MODEL:	3512C	**COMBUSTION:**	DI
BRAND:	CAT	**ENGINE SPEED (RPM):**	1,800
ENGINE POWER (BHP):	2,206	**HERTZ:**	60
GEN POWER WITH FAN (EKW):	1,500.0	**FAN POWER (HP):**	88.5
COMPRESSION RATIO:	14.7	**ASPIRATION:**	TA
RATING LEVEL:	STANDBY	**AFTERCOOLER TYPE:**	ATAAC
PUMP QUANTITY:	1	**AFTERCOOLER CIRCUIT TYPE:**	JW+OC, ATAAC
FUEL TYPE:	DIESEL	**INLET MANIFOLD AIR TEMP (F):**	122
MANIFOLD TYPE:	DRY	**JACKET WATER TEMP (F):**	210.2
GOVERNOR TYPE:	ADEM3	**TURBO CONFIGURATION:**	PARALLEL
ELECTRONICS TYPE:	ADEM3	**TURBO QUANTITY:**	4
CAMSHAFT TYPE:	STANDARD	**TURBOCHARGER MODEL:**	GTB4708BN-52T-0.96
IGNITION TYPE:	CI	**CERTIFICATION YEAR:**	2006
INJECTOR TYPE:	EUI	**CRANKCASE BLOWBY RATE (FT3/HR):**	2,203.4
FUEL INJECTOR:	3920220	**FUEL RATE (RATED RPM) NO LOAD (GAL/HR):**	9.9
UNIT INJECTOR TIMING (IN):	64.34	**PISTON SPD @ RATED ENG SPD (FT/MIN):**	2,244.1
REF EXH STACK DIAMETER (IN):	10		
MAX OPERATING ALTITUDE (FT):	3,937		

INDUSTRY	SUBINDUSTRY	APPLICATION
OIL AND GAS	LAND PRODUCTION	PACKAGED GENSET
ELECTRIC POWER	STANDARD	PACKAGED GENSET

General Performance Data

THIS STANDBY RATING IS FOR A STANDBY ONLY ENGINE ARRANGEMENT. RERATING THE ENGINE TO A PRIME OR CONTINUOUS RATING IS NOT PERMITTED.

GENSET POWER WITH FAN	PERCENT LOAD	ENGINE POWER	BRAKE MEAN EFF PRES (BMEP)	BRAKE SPEC FUEL CONSUMPTN (BSFC)	VOL FUEL CONSUMPTN (VFC)	INLET MFLD PRES	INLET MFLD TEMP	EXH MFLD TEMP	EXH MFLD PRES	ENGINE OUTLET TEMP
EKW	%	BHP	PSI	LB/BHP-HR	GAL/HR	IN-HG	DEG F	DEG F	IN-HG	DEG F
1,500.0	100	2,206	307	0.332	104.6	77.5	120.9	1,145.6	74.6	756.6
1,350.0	90	1,983	276	0.336	95.2	72.2	116.1	1,102.7	68.8	727.5
1,200.0	80	1,768	246	0.343	86.6	66.9	113.2	1,069.1	63.0	713.4
1,125.0	75	1,662	232	0.346	82.0	63.4	111.5	1,052.3	59.5	706.7
1,050.0	70	1,556	217	0.348	77.4	59.7	109.8	1,035.2	55.8	700.0
900.0	60	1,349	188	0.352	67.9	51.1	107.1	1,000.5	47.6	687.3
750.0	50	1,144	159	0.355	58.0	40.6	107.5	963.6	38.4	696.7
600.0	40	940	131	0.359	48.2	30.0	108.4	921.9	29.4	702.2
450.0	30	736	103	0.368	38.6	20.9	107.1	856.0	21.9	685.3
375.0	25	632	88	0.376	33.9	16.9	106.2	809.5	18.8	664.9
300.0	20	527	73	0.388	29.2	13.3	105.2	754.5	16.0	636.4
150.0	10	312	43	0.443	19.7	7.3	103.2	609.7	11.4	540.6

GENSET POWER WITH FAN	PERCENT LOAD	ENGINE POWER	COMPRESSOR OUTLET PRES	COMPRESSOR OUTLET TEMP	WET INLET AIR VOL FLOW RATE	ENGINE OUTLET WET EXH GAS VOL FLOW RATE	WET INLET AIR MASS FLOW RATE	WET EXH GAS MASS FLOW RATE	WET EXH VOL FLOW RATE (32 DEG F AND 29.98 IN HG)	DRY EXH VOL FLOW RATE (32 DEG F AND 29.98 IN HG)
EKW	%	BHP	IN-HG	DEG F	CFM	CFM	LB/HR	LB/HR	FT3/MIN	FT3/MIN
1,500.0	100	2,206	82	449.8	4,937.2	11,734.1	21,796.5	22,529.1	4,743.3	4,317.6
1,350.0	90	1,983	77	428.8	4,734.5	10,945.3	20,885.8	21,551.9	4,532.9	4,136.4
1,200.0	80	1,768	71	409.0	4,506.7	10,265.9	19,853.4	20,459.8	4,302.7	3,938.4
1,125.0	75	1,662	68	396.6	4,371.2	9,868.8	19,223.0	19,797.6	4,160.2	3,812.8
1,050.0	70	1,556	64	382.6	4,218.1	9,442.4	18,511.1	19,053.3	4,003.2	3,672.9
900.0	60	1,349	55	350.3	3,862.4	8,508.3	16,857.2	17,332.4	3,647.3	3,352.3
750.0	50	1,144	44	309.9	3,375.7	7,435.0	14,666.1	15,072.5	3,161.3	2,907.1
600.0	40	940	33	266.6	2,868.4	6,329.0	12,406.6	12,744.3	2,678.2	2,465.5
450.0	30	736	23	224.6	2,431.9	5,278.8	10,481.3	10,752.0	2,266.9	2,093.3
375.0	25	632	19	204.3	2,243.0	4,776.5	9,654.1	9,891.7	2,088.3	1,933.3
300.0	20	527	15	184.2	2,069.9	4,283.3	8,899.4	9,103.9	1,921.3	1,784.5
150.0	10	312	9	148.8	1,782.1	3,338.5	7,648.3	7,786.4	1,641.0	1,539.0

Heat Rejection Data

PERFORMANCE DATA[EM1898]

August 31, 2018

GENSET POWER WITH FAN	PERCENT LOAD	ENGINE POWER	REJECTION TO JACKET WATER	REJECTION TO ATMOSPHERE	REJECTION TO EXH	EXHUAST RECOVERY TO 350F	FROM OIL COOLER	FROM AFTERCOOLER	WORK ENERGY	LOW HEAT VALUE ENERGY	HIGH HEAT VALUE ENERGY
EKW	%	BHP	BTU/MIN	BTU/MIN	BTU/MIN	BTU/MIN	BTU/MIN	BTU/MIN	BTU/MIN	BTU/MIN	BTU/MIN
1,500.0	100	2,206	28,541	7,072	79,477	38,355	11,956	29,539	93,547	224,476	239,123
1,350.0	90	1,983	26,761	6,706	72,346	33,940	10,882	26,874	84,110	204,315	217,647
1,200.0	80	1,768	25,085	6,393	66,713	30,942	9,897	24,071	74,958	185,825	197,950
1,125.0	75	1,662	24,176	6,249	63,549	29,350	9,376	22,404	70,466	176,039	187,526
1,050.0	70	1,556	23,227	6,110	60,309	27,693	8,845	20,631	66,004	166,069	176,905
900.0	60	1,349	21,222	5,841	53,634	24,225	7,759	16,788	57,205	145,683	155,189
750.0	50	1,144	19,059	5,564	46,826	21,662	6,636	12,311	48,509	124,586	132,716
600.0	40	940	16,790	5,286	39,874	18,604	5,512	8,066	39,882	103,489	110,241
450.0	30	736	14,427	4,840	32,601	14,897	4,416	4,955	31,201	82,917	88,327
375.0	25	632	13,189	4,570	28,900	12,838	3,876	3,774	26,809	72,772	77,520
300.0	20	527	11,900	4,299	25,149	10,707	3,336	2,793	22,353	62,628	66,715
150.0	10	312	9,090	3,818	17,468	6,020	2,253	1,375	13,214	42,301	45,061

Sound Data

SOUND PRESSURE DATA FOR THIS RATING CAN BE FOUND IN PERFORMANCE NUMBER - DM8779.

Emissions Data

RATED SPEED POTENTIAL SITE VARIATION: 1800 RPM

GENSET POWER WITH FAN		EKW	1,500.0	1,125.0	750.0	375.0	150.0
PERCENT LOAD		%	100	75	50	25	10
ENGINE POWER		BHP	2,206	1,662	1,144	632	312
TOTAL NOX (AS NO2)		G/HR	14,366	7,266	4,835	3,673	2,831
TOTAL CO		G/HR	1,890	1,176	1,665	1,965	1,898
TOTAL HC		G/HR	351	381	358	283	329
PART MATTER		G/HR	97.6	99.1	150.9	184.0	112.2
TOTAL NOX (AS NO2)	(CORR 5% O2)	MG/NM3	2,848.7	1,803.1	1,671.1	2,214.1	2,967.2
TOTAL CO	(CORR 5% O2)	MG/NM3	427.2	336.3	712.5	1,486.6	2,381.4
TOTAL HC	(CORR 5% O2)	MG/NM3	68.8	95.6	123.3	175.3	360.2
PART MATTER	(CORR 5% O2)	MG/NM3	18.2	23.5	54.8	110.0	115.7
TOTAL NOX (AS NO2)	(CORR 5% O2)	PPM	1,388	878	814	1,078	1,445
TOTAL CO	(CORR 5% O2)	PPM	342	269	570	1,189	1,905
TOTAL HC	(CORR 5% O2)	PPM	128	178	230	327	672
TOTAL NOX (AS NO2)		G/HP-HR	6.58	4.41	4.26	5.85	9.14
TOTAL CO		G/HP-HR	0.87	0.71	1.47	3.13	6.13
TOTAL HC		G/HP-HR	0.16	0.23	0.32	0.45	1.06
PART MATTER		G/HP-HR	0.04	0.06	0.13	0.29	0.36
TOTAL NOX (AS NO2)		LB/HR	31.67	16.02	10.66	8.10	6.24
TOTAL CO		LB/HR	4.17	2.59	3.67	4.33	4.18
TOTAL HC		LB/HR	0.77	0.84	0.79	0.62	0.73
PART MATTER		LB/HR	0.22	0.22	0.33	0.41	0.25

RATED SPEED NOMINAL DATA: 1800 RPM

GENSET POWER WITH FAN		EKW	1,500.0	1,125.0	750.0	375.0	150.0
PERCENT LOAD		%	100	75	50	25	10
ENGINE POWER		BHP	2,206	1,662	1,144	632	312
TOTAL NOX (AS NO2)		G/HR	11,972	6,055	4,029	3,061	2,359
TOTAL CO		G/HR	1,050	653	925	1,092	1,055
TOTAL HC		G/HR	264	286	269	213	248
TOTAL CO2		KG/HR	1,096	853	602	352	204
PART MATTER		G/HR	69.7	70.8	107.8	131.4	80.1
TOTAL NOX (AS NO2)	(CORR 5% O2)	MG/NM3	2,373.9	1,502.6	1,392.6	1,845.1	2,472.7
TOTAL CO	(CORR 5% O2)	MG/NM3	237.3	186.8	395.9	825.9	1,323.0
TOTAL HC	(CORR 5% O2)	MG/NM3	51.7	71.9	92.7	131.8	270.9
PART MATTER	(CORR 5% O2)	MG/NM3	13.0	16.8	39.1	78.6	82.6
TOTAL NOX (AS NO2)	(CORR 5% O2)	PPM	1,156	732	678	899	1,204
TOTAL CO	(CORR 5% O2)	PPM	190	149	317	661	1,058
TOTAL HC	(CORR 5% O2)	PPM	97	134	173	246	506
TOTAL NOX (AS NO2)		G/HP-HR	5.48	3.68	3.55	4.87	7.62

PERFORMANCE DATA[EM1898]

August 31, 2018

TOTAL CO	G/HP-HR	0.48	0.40	0.81	1.74	3.40
TOTAL HC	G/HP-HR	0.12	0.17	0.24	0.34	0.80
PART MATTER	G/HP-HR	0.03	0.04	0.09	0.21	0.26
TOTAL NOX (AS NO2)	LB/HR	26.39	13.35	8.88	6.75	5.20
TOTAL CO	LB/HR	2.32	1.44	2.04	2.41	2.32
TOTAL HC	LB/HR	0.58	0.63	0.59	0.47	0.55
TOTAL CO2	LB/HR	2,417	1,881	1,327	776	449
PART MATTER	LB/HR	0.15	0.16	0.24	0.29	0.18
OXYGEN IN EXH	%	11.2	12.3	12.9	13.9	15.8
DRY SMOKE OPACITY	%	1.0	1.3	2.9	5.0	3.0
BOSCH SMOKE NUMBER		0.37	0.45	1.06	1.60	1.11

Regulatory Information

EPA EMERGENCY STATIONARY		2011 - ----		
Locality	**Agency**	**Regulation**	**Tier/Stage**	**Max Limits - G/BKW - HR**
U.S. (INCL CALIF)	EPA	STATIONARY	EMERGENCY STATIONARY	CO: 3.5 NOx + HC: 6.4 PM: 0.20

Altitude Derate Data

ALTITUDE CORRECTED POWER CAPABILITY (BHP)

AMBIENT OPERATING TEMP (F)	30	40	50	60	70	80	90	100	110	120	130	140	NORMAL
ALTITUDE (FT)													
0	2,206	2,206	2,206	2,206	2,206	2,206	2,206	2,206	2,206	2,206	2,206	2,096	2,206
1,000	2,206	2,206	2,206	2,206	2,206	2,206	2,206	2,206	2,206	2,206	2,162	2,074	2,206
2,000	2,206	2,206	2,206	2,206	2,206	2,206	2,206	2,206	2,206	2,176	2,118	2,007	2,206
3,000	2,206	2,206	2,206	2,206	2,206	2,206	2,206	2,173	2,135	2,098	2,052	1,919	2,206
4,000	2,201	2,201	2,201	2,201	2,201	2,171	2,132	2,094	2,057	2,021	1,963	1,831	2,201
5,000	2,129	2,129	2,129	2,129	2,129	2,092	2,054	2,017	1,982	1,947	1,875	1,743	2,129
6,000	2,059	2,059	2,059	2,059	2,053	2,015	1,978	1,943	1,909	1,876	1,765	1,677	2,059
7,000	1,992	1,992	1,992	1,992	1,976	1,940	1,904	1,870	1,838	1,787	1,677	1,588	1,992
8,000	1,927	1,927	1,927	1,927	1,902	1,867	1,833	1,800	1,769	1,699	1,610	1,522	1,927
9,000	1,865	1,865	1,865	1,865	1,831	1,797	1,764	1,733	1,699	1,610	1,522	1,412	1,865
10,000	1,805	1,805	1,805	1,795	1,761	1,729	1,697	1,667	1,610	1,522	1,368	1,279	1,805
11,000	1,522	1,522	1,522	1,522	1,522	1,522	1,522	1,522	1,434	1,324	1,213	1,125	1,522
12,000	1,478	1,478	1,478	1,478	1,478	1,478	1,478	1,390	1,279	1,169	1,081	993	1,478
13,000	1,434	1,434	1,434	1,434	1,434	1,434	1,346	1,235	1,147	1,037	971	882	1,434
14,000	1,390	1,390	1,390	1,390	1,390	1,279	1,191	1,103	1,015	927	860	794	1,390
15,000	1,346	1,346	1,346	1,346	1,235	1,147	1,059	971	882	816	772	728	1,346

Cross Reference

Test Spec	Setting	Engine Arrangement	Engineering Model	Engineering Model Version	Start Effective Serial Number	End Effective Serial Number
4577179	LL1861	5084278	GS656	LS	CT200463	
4577179	LL1861	5157729	PG242	-	LYH00001	

Supplementary Data

Type	Classification	Performance Number
SOUND	SOUND PRESSURE	DM8779

Performance Parameter Reference

Parameters Reference:DM9600-10

PERFORMANCE DEFINITIONS

Specification Sheet

DQKAA 1750 kW / 2188 kVA EMERGENCY STANBY

Diesel Generator Set QSK60 Series Engine

1600 kW - 2000 kW 60 Hz

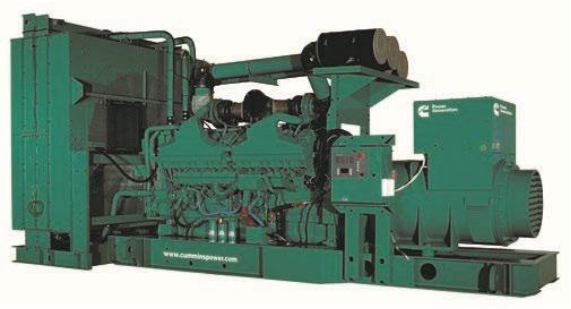

Description

Cummins® commercial generator sets are fully integrated power generation systems providing optimum performance, reliability and versatility for stationary Standby and Prime Power applications. Codes or standards compliance may not be available with all model configurations – consult factory for availability.

Features

Cummins heavy-duty engine - Rugged 4-cycle, industrial diesel delivers reliable power, low emissions and fast response to load changes.

Alternator - Several alternator sizes offer selectable motor starting capability with low reactance 2/3 pitch windings, low waveform distortion with non-linear loads and fault clearing short-circuit capability.

Permanent Magnet Generator (PMG) - Offers enhanced motor starting and fault clearing short-circuit capability.

Control system - The PowerCommand® digital control is standard equipment and provides total genset system integration including automatic remote starting/stopping, precise frequency and voltage regulation, alarm and status message display, AmpSentry TM protective relay, output metering and auto-shutdown at fault detection and NFPA 110 Level 1 compliance.

Cooling system - Standard integral set-mounted radiator system, designed and tested for rated ambient temperatures, simplifies facility design requirements for rejected heat.

NFPA - The genset accepts full rated load in a single step in accordance with NFPA 110 for Level 1 systems.

Warranty and service - Backed by a comprehensive warranty and worldwide distributor network.

Rating Definition

Emergency Standby Power (ESP):
Applicable for supplying power to varying electrical load for the duration of power interruption of a reliable utility source. Emergency Standby Power (ESP) is in accordance with ISO 8528. Fuel Stop power in accordance with ISO 3046, AS 2789, DIN 6271 and BS 5514.

©2020 Cummins Inc. | S-1514 (09/20)

Generator Set Specifications

Governor regulation class	ISO8528 Part 1 Class G3
Voltage regulation, no load to full load	± 0.5%
Random voltage variation	± 0.5%
Frequency regulation	Isochronous
Random frequency variation	± 0.25%
Radio frequency emissions compliance	IEC 801.2 through IEC 801.5; MIL STD 461C, Part 9

Engine Specifications

Bore	158.8 mm (6.25 in.)
Stroke	190.0 mm (7.48 in.)
Displacement	60.2 litres (3673 in^3)
Configuration	Cast iron, V 16 cylinder
Battery capacity	2200 amps minimum at ambient temperature of -18 °C to 0 °C (0 °F to 32 °F)
Battery charging alternator	40 amps
Starting voltage	24 volt, negative ground
Fuel system	Cummins' Modular Common Rail System
Fuel filter	Dual element, 10 micron filtration, spin-on fuel filters with 15 micron water separator
Air cleaner type	Dry replaceable element
Lube oil filter type(s)	Four spin-on, combination full flow filter and bypass filters
Standard cooling system	High ambient radiator

Alternator Specifications

Design	Brushless, 4 pole, drip proof revolving field
Stator	2/3 pitch
Rotor	Single bearing, flexible discs
Insulation system	Class H on low and medium voltage, Class F on high voltage
Standard temperature rise	150 ºC Standby at 40 °C ambient
Exciter type	Permanent Magnet Generator (PMG)
Phase rotation	A (U), B (V), C (W)
Alternator cooling	Direct drive centrifugal blower fan
AC waveform Total Harmonic Distortion (THDV)	< 5% no load to full linear load, < 3% for any single harmonic
Telephone Influence Factor (TIF)	< 50 per NEMA MG1-22.43
Telephone Harmonic Factor (THF)	< 3

Generator Set options and Accessories

Engine
- 208/240/480 V coolant heater for ambient below 4.5 °C (40 °F)

Control panel
- PowerCommand 3.3
- Multiple language support
- Exhaust pyrometer
- Remote annunciator panel
- AC output analog meters (bargraph)

Alternator
- 105 °C rise
- 120/240 V 300 W anti-condensation heater
- Temperature sensor - RTDs, 2/phase

Exhaust system
- Critical grade exhaust silencer
- AC entrance box
- Battery
- Battery rack with hold-down - floor standing
- Circuit breaker - set mounted
- Spring isolators
- 2-year warranty

©2020 Cummins Inc. | S-1514 (09/20)

PowerCommand 3.3 – Control System

An integrated microprocessor-based generator set control system providing voltage regulation, engine protection, alternator protection, operator interface and isochronous governing. Refer to document S-1570 for more detailed information on the control.

AmpSentry – Includes integral AmpSentry protection, which provides a full range of alternator protection functions that are matched to the alternator provided.

Power management – Control function provides battery monitoring and testing features and smart starting control system.

Advanced control methodology – Three phase sensing, full wave rectified voltage regulation, with a PWM output for stable operation with all load types.

Communications interface – Control comes standard with PCCNet and Modbus interface.

Regulation compliant – Prototype tested: UL, CSA and CE compliant.

Service - InPower™ PC-based service tool available for detailed diagnostics, setup, data logging and fault simulation.

Easily upgradeable – PowerCommand controls are designed with common control interfaces.

Reliable design – The control system is designed for reliable operation in harsh environment.

Multi-language support

Operator Panel Features

Operator/display functions

- Displays paralleling breaker status
- Provides direct control of the paralleling breaker
- 320 x 240 pixels graphic LED backlight LCD
- Auto, manual, start, stop, fault reset and lamp test/panel lamp switches
- Alpha-numeric display with pushbuttons
- LED lamps indicating genset running, remote start, not in auto, common shutdown, common warning, manual run mode, auto mode and stop

Paralleling control functions

- First Start Sensor™ system selects first genset to close to bus
- Phase lock loop synchronizer with voltage matching
- Sync check relay
- Isochronous kW and kVar load sharing
- Load govern control for utility paralleling
- Extended paralleling (base load/peak shave) mode
- Digital power transfer control, for use with a breaker pair to provide open transition, closed transition, ramping closed transition, peaking and base load functions.

Alternator data

- Line-to-Neutral and Line-to-Line AC volts
- 3-phase AC current
- Frequency
- kW, kVAr, power factor kVA (three phase and total)

Engine data

- DC voltage
- Engine speed
- Lube oil pressure and temperature
- Coolant temperature
- Comprehensive FAE data (where applicable)

Other data

- Genset model data
- Start attempts, starts, running hours, kW hours
- Load profile (operating hours at % load in 5% increments)
- Fault history
- Data logging and fault simulation (requires InPower)

Standard Control Functions

Digital governing

- Integrated digital electronic isochronous governor
- Temperature dynamic governing

Digital voltage regulation

- Integrated digital electronic voltage regulator
- 3-phase, 4-wire Line-to-Line sensing
- Configurable torque matching

AmpSentry AC protection

- AmpSentry protective relay
- Over current and short circuit shutdown
- Over current warning
- Single and three phase fault regulation
- Over and under voltage shutdown
- Over and under frequency shutdown
- Overload warning with alarm contact
- Reverse power and reverse Var shutdown
- Field overload shutdown

Engine protection

- Battery voltage monitoring, protection and testing
- Overspeed shutdown
- Low oil pressure warning and shutdown
- High coolant temperature warning and shutdown
- Low coolant level warning or shutdown
- Low coolant temperature warning
- Fail to start (overcrank) shutdown
- Fail to crank shutdown
- Cranking lockout
- Sensor failure indication
- Low fuel level warning or shutdown
- Fuel-in-rupture-basin warning or shutdown

Full authority electronic engine protection

Control functions

- Time delay start and cool down
- Real time clock for fault and event time stamping
- Exerciser clock and time of day start/stop
- Data logging
- Cycle cranking
- Load shed
- Configurable inputs and outputs (4)
- Remote emergency stop

Options

- Auxiliary output relays (2)

Our energy working for you.™

©2020 Cummins Inc. | S-1514 (09/20)

Codes and Standards

Codes or standards compliance may not be available with all model configurations – consult factory for availability.

	This generator set is designed in facilities certified to ISO 9001 and manufactured in facilities certified to ISO 9001 or ISO 9002.		The generator set is available listed to UL 2200 for all 60 Hz low voltage models, Stationary Engine Generator Assemblies. The PowerCommand control is Listed to UL 508 - Category NITW7 for U.S. and Canadian usage. Circuit breaker assemblies are UL 489 Listed for 100% continuous operation and also UL 869A Listed Service Equipment.
	The Prototype Test Support (PTS) program verifies the performance integrity of the generator set design. Cummins products bearing the PTS symbol meet the prototype test requirements of NFPA 110 for Level 1 systems.	**U.S. EPA**	Engine certified to Stationary Emergency U.S. EPA New Source Performance Standards, 40 CFR 60 subpart IIII Tier 2 exhaust emission levels. U.S. applications must be applied per this EPA regulation.
	All low voltage models are CSA certified to product class 4215-01.	**International Building Code**	The genset package is certified for seismic application in accordance with the following International Building Code: IBC2000, IBC2003, IBC2006, and IBC2009.

Warning: Back feed to a utility system can cause electrocution and/or property damage. Do not connect to any building's electrical system except through an approved device or after building main switch is open.

©2020 Cummins Inc. | S-1514 (09/20)

2021 EPA Tier 2 Exhaust Emission Compliance Statement 1750DQKAA Stationary Emergency

60 Hz Diesel Generator Set

Compliance Information:

The engine used in this generator set complies with Tier 2 emissions limit of U.S. EPA New Source Performance Standards for stationary emergency engines under the provisions of 40 CFR 60 Subpart IIII when tested per ISO8178 D2.

Engine Manufacturer:	Cummins Inc.
EPA Certificate Number:	MCEXL060.AAD-041
Effective Date:	07/16/2020
Date Issued:	07/16/2020
EPA Engine Family (Cummins Emissions Family):	MCEXL060.AAD

Engine Information:

Model:	QSK60-G6 NR2	Bore:	6.25 in. (159 mm)
Engine Nameplate HP:	2922	Stroke:	7.48 in. (190 mm)
Type:	4 Cycle, 60°V, 16 Cylinder Diesel	Displacement:	3673 cu. in. (60.2 liters)
Aspiration:	Turbocharged and CAC	Compression Ratio:	14.5:1
Emission Control Device:	Electronic Control	Exhaust Stack Diameter:	2 – 14 in.

Diesel Fuel Emissions Limits

D2 Cycle Exhaust Emissions

	Grams per BHP-hr			Grams per kW_m-hr		
	NO_X + NMHC	CO	PM	NO_X + NMHC	CO	PM
Test Results	4.5	0.3	0.04	6.0	0.4	0.05
EPA Emissions Limit	4.8	2.6	0.15	6.4	3.5	0.20

Test methods: EPA emissions recorded per 40 CFR Part 60, 89, 1039, 1065 and weighted at load points prescribed in the regulations for constant speed engines.

Diesel fuel specifications: Cetane number: 40-50. Reference: ASTM D975 No. 2-D, 300-500 ppm Sulfur.

Reference conditions: Air inlet temperature: 25°C (77°F), Fuel inlet temperature: 40°C (104°F). Barometric pressure: 100 kPa (29.53 in Hg), Humidity: 10.7 g/kg (75 grains H2O/lb) of dry air; required for NOx correction, Restrictions: Intake restriction set to a maximum allowable limit for clean filter; Exhaust back pressure set to a maximum allowable limit.

Tests conducted using alternate test methods, instrumentation, fuel or reference conditions can yield different results. Engine operation with excessive air intake or exhaust restriction beyond published maximum limits, or with improper maintenance, may result in elevated emission levels.

Specification sheet

Diesel generator set

QSB7 series engine

125-200 kW @ 60 Hz

EPA Tier 3 emissions

Description

Cummins® generator sets are fully integrated power generation systems providing optimum performance, reliability and versatility for stationary Standby applications.

Features

Heavy duty engine - Rugged 4-cycle industrial diesel delivers reliable power and fast response to load changes.

Alternator - Several alternator sizes offer selectable motor starting capability with low reactance 2/3 pitch windings, low waveform distortion with non-linear loads and fault clearing short-circuit capability.

Control system - The PowerCommand® 1.1 electronic control is standard equipment and provides total generator set system integration including automatic remote starting/stopping, precise frequency and voltage regulation, alarm and status message display, output metering, auto-shutdown at fault detection and NFPA 110 Level 1 compliance.

Cooling system - Standard cooling package provides reliable running at up to 50 °C (122 °F) ambient temperature.

Enclosures - The aesthetically appealing enclosure incorporates special designs that deliver one of the quietest generators of its kind. Aluminium material plus durable powder coat paint provides the best anti-corrosion performance. The generator set enclosure has been evaluated to withstand 180 MPH wind loads in accordance with ASCE7 -10. The design has hinged doors to provide easy access for service and maintenance.

Fuel tanks - Dual wall sub-base fuel tanks are offered as optional features, providing economical and flexible solutions to meet extensive code requirements on diesel fuel tanks.

NFPA - The generator set accepts full rated load in a single step in accordance with NFPA 110 for Level 1 systems.

Warranty and service - Backed by a comprehensive warranty and worldwide distributor network.

©2019 Cummins Inc. | NAS-6370-EN.DOCX (04/19) A061Y585

Generator set specifications

Governor regulation class	ISO8528 Part 1 Class G3
Voltage regulation, no load to full load	± 1.0%
Random voltage variation	± 1.0%
Frequency regulation	Isochronous
Random frequency variation	± 0.50%
Radio frequency emissions compliance	FCC code title 47 part 15 class A and B

Engine specifications

Design	Turbocharged and charge air cooled
Bore	107 mm (4.21 in.)
Stroke	124 mm (4.88 in.)
Displacement	6.7 L (408 in^3)
Cylinder block	Cast iron, in-line 6 cylinder
Battery capacity	2 x 850 amps per battery at ambient temperature of 0 °C (32 °F)
Battery charging alternator	100 amps
Starting voltage	2 x 12 volt in parallel, negative ground
Lube oil filter type(s)	Spin-on with relief valve
Standard cooling system	High ambient radiator
Rated speed	1800 rpm

Alternator specifications

Design	Brushless, 4 pole, drip proof, revolving field
Stator	2/3 pitch
Rotor	Direct coupled, flexible disc
Insulation system	Class H per NEMA MG1-1.65
Standard temperature rise	120 ºC (248 °F) Standby
Exciter type	Torque match (shunt) with PMG as option
Alternator cooling	Direct drive centrifugal blower
AC waveform Total Harmonic Distortion (THDV)	< 5% no load to full linear load, < 3% for any single harmonic
Telephone Influence Factor (TIF)	< 50 per NEMA MG1-22.43
Telephone Harmonic Factor (THF)	< 3%

Generator set options

Fuel system
- Basic fuel tanks

Engine
- Engine air cleaner – normal duty
- Shut down – low oil pressure
- Extension – oil drain
- Engine oil heater

Alternator
- 120 °C temperature rise alternator
- PMG excitation
- Engine oil heater
- Annunciator – RS485
- Battery charger – 6A, 12 V

Control
- Stop switch – emergency
- Auxiliary output relays (2)

Electrical
- One circuit breaker configuration
- 100% rated LSI circuit breaker
-

Enclosure
- Aluminum enclosure Sound Level 1, green color

Cooling system
- Shutdown – low coolant level
- Extension – coolant drain
- Coolant heater options:
  - <4 °C (40 °F) – cold weather

Warranty
- Base warranty – 2 year/1000 hours, Standby

©2019 Cummins Inc. | NAS-6370-EN.DOCX (04/19) A061F585

Generator Set Data Sheet

Model:	C200D6D
Frequency:	60 Hz
Fuel Type:	Diesel
KW Rating:	200 Standby
Emissions level:	EPA Tier 3, Stationary Emergency

Exhaust Emission Data Sheet:	EDS-3046
Exhaust Emission Compliance Sheet:	EPA-2035
Sound Performance Data Sheet:	MSP-4010
Cooling Performance Data Sheet:	MCP-2050
Prototype Test Summary Data Sheet:	PTS-636

Fuel Consumption

	Standby			
	kW (kVA)			
Ratings	200 (250)			
Load	1/4	1/2	3/4	Full
US gph	5.7	8.7	11.7	14.9
L/hr	21.57	32.92	44.28	56.39

Engine

	Standby rating
Engine Manufacturer	Cummins Inc.
Engine Model	QSB7-G5
Configuration	Cast iron, in-line, 6 cylinders
Aspiration	Turbocharged and charge air cooled
Gross Engine Power Output, kWm (bhp)	242 (324)
BMEP at set rated load, kPa (psi)	2276 (330)
Bore, mm (in)	107 (4.21)
Stroke, mm (in)	124 (4.88)
Rated Speed, rpm	1800
Piston Speed, m/s (ft/min)	7.44 (1464)
Compression Ratio	17.2:1
Lube Oil Capacity, L (qt)	17.4 (18.38)
Overspeed limit, rpm	2250

Fuel Flow

Maximum Fuel Flow, L/hr (US gph)	103 (27.0)
Maximum Fuel Inlet Restriction with Clean Filter, mm Hg (in Hg)	127 (5.0)

©2019 Cummins Inc. | NAD-6374-EN (09/19) A061F589

Air

	Standby rating
Combustion Air, m3/min (scfm)	15.86 (560)
Maximum Air Cleaner Restriction with Clean Filter, kPa (in H2O)	3.7 (15)

Exhaust

Exhaust Flow at set rated load, m^3/min (cfm)	40.74 (1439)
Exhaust Temperature, °C (°F)	512.22 (954)
Maximum Back Pressure, kPa (in H_2O)	10 (40.19)
Actual Exhaust Back Pressure with CPG Sound level 2 Enclosure Muffler, kPa (in H_2O)	10 (40.19)
Actual Exhaust Back Pressure with CPG Weather Enclosure Muffler, kPa (in H_2O)	8.4 (33.76)

Standard Set-Mounted Radiator Cooling

Ambient Design, ° C (° F)	49 (120.2)
Fan Load, kW_m (HP)	14.02 (18.8)
Coolant Capacity (with radiator), L (US Gal)	22 (5.9)
Cooling System Air Flow, m^3/min (scfm)	305.82 (10800)
Total Heat Rejection, MJ/min (Btu/min)	10.06 (9538)
Maximum Cooling Air Flow Static Restriction, kPa (in H_2O)	0.12 (0.5)

Derating Factors

Standby	Engine power available up to 2148 m (7049 ft.) at ambient temperatures up to 40° C (104° F) and 1086 m (3563 ft.) at 50° C (122° F). Consult your Cummins distributor for temperature and ambient

Alternator Data

Standard Alternators	Single phase[2]	Three Phase[1]				
Maximum Temperature Rise above 40 °C Ambient	120 °C	120 °C				
Feature Code	BB90-2	B946-2	B986-2	B952-2	B943-2	BB86-2
Alternator Data Sheet Number	ADS-213	ADS-213	ADS-212	ADS-212	ADS-212	ADS-212
Voltage Ranges	120/240	120/208	120/240	347/600	277/480	127/220
Voltage Feature Code	R104-2	R098-2	R106-2	R114-2	R002-2	R020-2
Surge kW	205.7	211.1	213.4	214.3	213.4	211.6
Motor Starting kVA (at 90% sustained voltage) Shunt	770	770	672	770	672	770
Motor Starting kVA (at 90% sustained voltage) PMG	920	920	791	920	791	920
Full load Current Amps at Standby Rating	833	694	602	240	301	656

Notes:
[1] Single phase power can be taken from a three phase generator set at up to 2/3 set rated 3-phase kW at 1.0 power factor
[2] Full single phase output up to full set rated 3-phase kW at 1.0 power factor

Formulas for Calculating Full Load Currents:

Three phase output

$$\frac{kW \times 1000}{Voltage \times 1.73 \times 0.8}$$

Single phase output

$$\frac{kW \times SinglePhaseFactor \times 1000}{Voltage}$$

Warning: Back feed to a utility system can cause electrocution and/or property damage. Do not connect to any building's electrical system except through an approved device or after building main switch is open.

Specification Sheet

PowerCommand® 1.1 Control System

Description

The PowerCommand control system is a microprocessor-based generator set monitoring, metering and control system designed to meet the demands of today's engine driven generator sets. The integration of all control functions into a single control system provides enhanced reliability and performance compared to conventional generator set control systems. These control systems have been designed and tested to meet the harsh environment in which gensets are typically applied.

Features

Easy to view: HMI 211RS for residential use. 128 x 64 pixel graphic LED backlight LCD.

Easy to use: Tactile buttons for generator set start/stop. Residential Standby display for convenient use.

Modbus® interface: Eliminates need for MODLON.

Progressive protective functions: Advanced Overcurrent Protection – Generator set monitoring & protection.

Digital voltage regulation: Single phase full wave SCR type regulator compatible with either shunt or PMSG systems.

Digital engine speed governing: Provides isochronous frequency regulation.

12 and 24 VDC battery operation.

Automatic mains failure: Smooth & automatic transfer and re-transfer of load from utility to generator set & vice-versa.

Exerciser clock: Runs generator set exerciser routines for dependability of operation.

Warranty and service: Backed by a comprehensive warranty and worldwide distributor service network.

Certification: Suitable for us on generator sets that are designed, manufactured, tested and certified to relevant UL, NFPA, ISO, IEC Mil Std., CE and CSA standards.

©2019 Cummins Inc. | PDS-1566 | PD00000147 | (09/19)

PowerCommand Digital Generator Set Control PCC 1302

Description

The PowerCommand generator set control is suitable for use on a wide range of generator sets in non-paralleling applications. The PowerCommand control is compatible with shunt or PMG excitation style. It is suitable for use with reconnectable or non-reconnectable generators, and it can be configured for any frequency, voltage and power connection from 120-600 VAC Line-to-Line.

Power for this control system is derived from the generator set starting batteries. The control functions over a voltage range from 8 VDC to 30 VDC.

Features

- 12 and 24 VDC battery operation.
- Digital voltage regulation.
- Digital engine speed governing (where applicable) - Provides isochronous frequency regulation.
- Full authority engine communications (where applicable) - Provides communication and control with the Engine Control Module (ECM).
- Common harnessing - with higher feature Cummins controls allows for easy field upgrades.
- Generator set monitoring - Monitors status of all critical engine and alternator functions.
- Digital genset metering (AC and DC).
- Genset battery monitoring system - to sense and warn against a weak battery condition.
- Engine starting - Includes relay drivers for starter, fuel shut off (FSO), glow plug/spark ignition power and switch B+ applications.
- Generator set protection - Protects engine and alternator.
- Advanced serviceability - using InPower™, a PC-based software service tool.
- Environmental protection - The control system is designed for reliable operation in harsh environments. The main control board is a fully encapsulated module that is protected from the elements.
- Exerciser function – Routine exercising of generator set.
- Supports dual fuel control.
- Automatic Mains Failure function built in generator set controller. Modbus interface - for interconnecting to customer equipment.
- Configurable inputs and outputs - Four discrete inputs and two dry contact relay outputs.
- Warranty and service - Backed by a comprehensive warranty and worldwide distributor service network.
- Certifications - Suitable for use on generator sets that are designed, manufactured, tested and certified to relevant UL, NFPA, ISO, IEC, Mil Std., CE and CSA standards.

Base Control Functions

HMI capability

Operator adjustments - The HMI includes provisions for many set up and adjustment functions.

Generator set hardware data - Access to the control and software part number, generator set rating in kVA and generator set model number is provided from the HMI or InPower™.

Data logs - Includes engine run time, controller on time, number of start attempts.

Fault history - Provides a record of the most recent fault conditions with control hours time stamp. Up to 10 events are stored in the control non-volatile memory.

Alternator data

- Voltage (single or three phase Line-to-Line and Line-to-Neutral)
- Current (single or three phase)
- kVA (three phase and total)
- Frequency
- Engine data
- Starting battery voltage
- Engine speed
- Engine temperature
- Engine oil pressure
- Partial Full Authority Engine (FAE) data (where applicable)
- Service adjustments - The HMI includes provisions for adjustment and calibration of generator set control functions. Adjustments are protected by a password. Functions include:
- Engine speed governor adjustments
- Voltage regulation adjustments
- Cycle cranking
- Configurable fault set up
- Configurable output set up
- Meter calibration
- Units of measurement

©2019 Cummins Inc. | PDS-1566 | PD00000147 | (09/19)

Engine control

SAE-J1939 CAN interface to full authority ECMs (where applicable) - Provides data swapping between genset and engine controller for control, metering and diagnostics.

12 VDC/24 VDC battery operations - PowerCommand will operate either on 12 VDC or 24 VDC batteries.

Isochronous governing (where applicable) - Capable of controlling engine speed within +/-0.25% for any steady state load from no load to full load. Frequency drift will not exceed +/-0.5% for a 33 °C (60 °F) change in ambient temperature over an 8 hour period.

Temperature dependent governing dynamics (with electronic governing) - Modifies the engine governing control parameters as a function of engine temperature. This allows the engine to be more responsive when warm and more stable when operating at lower temperature levels.

Remote start mode - Accepts a ground signal from remote devices to automatically start the generator set and immediately accelerate to rated speed and voltage. The remote start signal will also wake up the control from sleep mode. The control can incorporate a time delay start and stop.

Remote and local Emergency stop - The control accepts a ground signal from a local (genset mounted) or remote (facility mounted) Emergency stop switch to cause the generator set to immediately shut down. The generator set is prevented from running or cranking with the switch engaged. If in sleep mode, activation of either Emergency stop switch will wake up the control.

Sleep mode - The control includes a configurable low current draw state to minimize starting battery current draw when the genset is not operating. The control can also be configured to go into a low current state while in auto for Prime applications or applications without a battery charger.

Engine starting - The control system supports automatic engine starting. Primary and backup start disconnects are achieved by one of three methods: magnetic pickup, battery charging alternator feedback or main alternator output frequency. The control also supports configurable glow plug control when applicable.

Cycle cranking - Configurable for the number of starting cycles (1 to 7) and duration of crank and rest periods. Control includes starter protection algorithms to prevent the operator from specifying a starting sequence that might be damaging.

Time delay start and stop (cooldown) - Configurable for time delay of 0-300 seconds prior to starting after receiving a remote start signal and for time delay of 0-600 seconds prior to shut down after signal to stop in normal operation modes. Default for both time delay periods is 0 seconds.

Alternator control

The control includes an integrated line-to-line sensing voltage regulation system that is compatible with shunt or PMG excitation systems. The voltage regulation system is full wave rectified and has an SCR output for good motor starting capability. Major system features include:

Digital output voltage regulation - Capable of regulating output voltage to within +/-1.0% for any loads between no load and full load. Voltage drift will not exceed +/-1.5% for a 40 ºC (104 ºF) change in temperature in an eight hour period. On engine starting or sudden load acceptance, voltage is controlled to a maximum of 5% overshoot over nominal level.

The automatic voltage regulator feature can be disabled to allow the use of an external voltage regulator.

Torque-matched V/Hz overload control - The voltage roll-off set point and rate of decay (i.e. the slope of the V/Hz curve) is adjustable in the control.

Protective Functions

On operation of a protective function the control will indicate a fault by illuminating the appropriate status LED on the HMI, as well as display the fault code and fault description on the LCD. The nature of the fault and time of occurrence are logged in the control. The service manual and InPower service tool provide service keys and procedures based on the service codes provided. Protective functions include:

Battle short mode

When enabled and the battle short switch is active, the control will allow some shutdown faults to be bypassed. If a bypassed shutdown fault occurs, the fault code and description will still be annunciated, but the genset will not shutdown. This will be followed by a fail to shutdown fault. Emergency stop shutdowns and others that are critical for proper operation are not bypassed. Please refer to the Control Application Guide or Manual for list of these faults.

Configurable alarm and status inputs

The control accepts up to four alarm or status inputs (configurable contact closed to ground or open) to indicate a configurable (customer-specified) condition. The control is programmable for warning, shutdown or status indication and for labelling the input.

Emergency stop

Annunciated whenever either Emergency stop signal is received from external switch.

General engine protection

Low and high battery voltage warning - Indicates status of battery charging system (failure) by continuously monitoring battery voltage.

Weak battery warning - The control system will test the battery each time the generator set is signaled to start and indicate a warning if the battery indicates impending failure.

Fail to start (overcrank) shutdown - The control system will indicate a fault if the generator set fails to start by the completion of the engine crack sequence.

Fail to crank shutdown - Control has signaled starter to crank engine but engine does not rotate.

Cranking lockout - The control will not allow the starter to attempt to engage or to crank the engine when the engine is rotating.

Hydro mechanical fuel system engine protection

Overspeed shutdown - Default setting is 115% of nominal.

Low lube oil pressure warning/shutdown - Level is pre-set (configurable with InPower) to match the capabilities of the engine used. Control includes time delays to prevent nuisance alarms.

High lube oil temperature warning/shutdown - Level is pre-set (configurable with InPower) to match the capabilities of the engine used. Control includes time delays to prevent nuisance alarms.

High engine temperature warning/shutdown - Level is pre-set (configurable with InPower) to match the capabilities of the engine used. Control includes time delays to prevent nuisance alarms.

Low coolant temperature warning - Indicates that engine temperature may not be high enough for a 10 second start or proper load acceptance.

Sensor failure indication - Logic is provided on the base control to detect analog sensor or interconnecting wiring failures.

©2019 Cummins Inc. | PDS-1566 | PD00000147 | (09/19)

Full authority electronic engine protection

Engine fault detection is handled inside the engine ECM. Fault information is communicated via the SAE-J1939 data link for annunciation in the HMI

Alternator protection

High AC voltage shutdown (59) - Output voltage on any phase exceeds pre-set values. Time to trip is inversely proportional to amount above threshold. Values adjustable from 105-130% of nominal voltage, with time delay adjustable from 0.1-10 seconds. Default value is 110% for 10 seconds.

Low AC voltage shutdown (27) - Voltage on any phase has dropped below a pre-set value. Adjustable over a range of 50-95% of reference voltage, time delay 2-20 seconds. Default value is 85% for 10 seconds.

Overcurrent warning/shutdown - Implementation of the thermal damage curve with instantaneous trip level calculated based on current transformer ratio and application power rating.

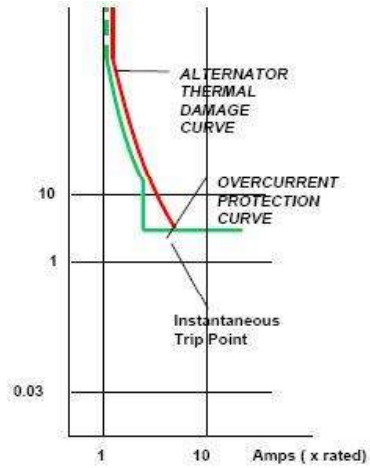

•

Under frequency shutdown (81 u) - Generator set output frequency cannot be maintained. Settings are adjustable from 2-10 Hz below nominal governor set point, for a 5-20 second time delay. Default: 6 Hz, 10 seconds.

Over frequency shutdown/warning (81o) - Generator set is operating at a potentially damaging frequency level. Settings are adjustable from 2-10 Hz above nominal governor set point for a 1-20 second time delay. Default: 6 Hz, 10 seconds, enabled.

Loss of sensing voltage shutdown - Shutdown of generator set will occur on loss of voltage sensing inputs to the control.

Field overload shutdown - Uses field voltage to shutdown generator set when a field overload condition occurs.

Advanced Functions

Automatic mains failure*

The built in AMF feature provides the automatic transfer and re-transfer of the load from utility to generator set and vice-versa.

- Automatically starts-stops the generator set in the event of utility failure.
- Annunciates faults.

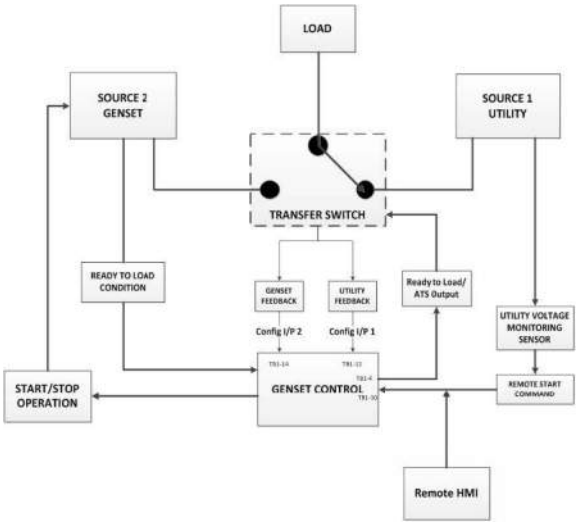

•

* A utility voltage monitoring sensor (as shown in the AMF diagram above) must be connected in order to use the AMF feature on the 1302 control. Use Schneider Electric Relay RSB1A120U7 and Socket RSZE1S35M.

Exerciser clock

The exerciser clock runs the generator set exerciser routines for dependability of operation.

Field Control Interface

Input signals to the base control include:

- Remote start
- Local and Emergency stop
- Configurable inputs: Control includes (4) input signals from customer discrete devices that are configurable for warning, shutdown or status indication, as well as message displayed.

Output signals from the PowerCommand control include:

- Configurable relay outputs: Control includes (2) relay output contacts rated at 2 A. These outputs can be configured to activate on any control warning or shutdown fault as well as ready to load, not in auto, common alarm, common warning and common shutdown.
- Ready to load (generator set running) signal: Operates when the generator set has reached 90% of rated speed and voltage and latches until generator set is switched to off or idle mode.

©2019 Cummins Inc. | PDS-1566 | PD00000147 | (09/19)

PowerCommand Human Machine Interface HMI211

Description

This control system includes an intuitive operator interface panel that allows for complete genset control as well as system metering, fault annunciation, configuration and diagnostics. The interface includes five generator set status LED lamps with both internationally accepted symbols and English text to comply with customer needs. The interface also includes an LED backlit LCD display with tactile feel soft-switches for easy operation and screen navigation. It is configurable for units of measurement and has adjustable screen contrast and brightness.

The *run/off/auto* switch function is integrated into the interface panel.

All data on the control can be viewed by scrolling through screens with the navigation keys. The control displays the current active fault and a time-ordered history of the five previous faults.

Features

- LED indicating lamps:
  - Remote start
  - Not in auto
  - Shutdown
  - Warning
  - Auto
  - Run
- 128 x 64 pixels graphic LED backlight LCD.
- Four tactile feel membrane switches for LCD defined operation. The functions of these switches are defined dynamically on the LCD.
- Two tactile feel membrane switches dedicated for off and back.
- Allows for complete genset control setup.
- Certifications: Suitable for use on generator sets that are designed, manufactured, tested and certified to relevant UL, NFPA, ISO, IEC, Mil Std., CE and CSA standards.
- HMI 211RS provides convenience for residential use.

Communications Connections

PC tool interface - This RS-485 communication port allows the HMI to communicate with a personal computer running InPower.

This RS-485 communication port allows the HMI to communicate with the main control board.

Mechanical Drawing

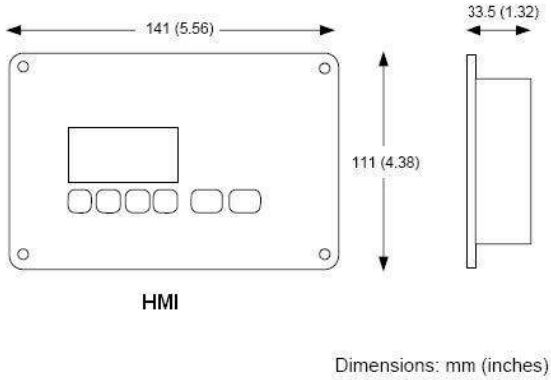

Software

InPower (beyond 6.0 version) is a PC-based software service tool that is designed to directly communicate to PowerCommand generator sets and transfer switches, to facilitate service and monitoring of these products.

Environment

The control is designed for proper operation without recalibration in ambient temperatures from -40 ºC (-40 ºF) to +70º C (158 ºF), and for storage from -55 ºC (-67 ºF) to +80 ºC (176 ºF). Control will operate with humidity up to 95%, non-condensing.

The HMI is designed for proper operation in ambient temperatures from -40 ºC* (-40 ºF) to +70 ºC (158 ºF), and for storage from -40 ºC* (-40 ºF) to +80 ºC (176 ºF).

The control board is fully encapsulated to provide superior resistance to dust and moisture. Display panel has a single membrane surface, which is impervious to effects of dust, moisture, oil and exhaust fumes. This panel uses a sealed membrane to provide long reliable service life in harsh environments.

The control system is specifically designed and tested for resistance to RFI/EMI and to resist effects of vibration to provide a long reliable life when mounted on a generator set. The control includes transient voltage surge suppression to provide compliance to referenced standards.

* Heater accessory (pn: A040H853) is available for enhanced operation below -20 ºC

Certifications

PowerCommand meets or exceeds the requirements of the following codes and standards:

- NFPA 110 for level 1 and 2 systems.
- ISO 8528-4: 1993 compliance, controls and switchgear.
- CE marking: The control system is suitable for use on generator sets to be CE-marked.
- EN 50081-1,2 residential/light industrial emissions or industrial emissions.
- EN 50082-1,2 residential/light industrial or industrial susceptibility.
- ISO 7637-2, level 2; DC supply surge voltage test.
- Mil Std. 202C, Method 101 and ASTM B117: Salt fog test.
- PowerCommand control systems and generator sets are designed and manufactured in ISO 9001 certified facilities.
- UL 6200 recognized and suitable for use on UL 2200 Listed generator sets.
- CSA C282-M1999 compliance.
- CSA 22.2 No. 14 M91 industrial controls.

©2019 Cummins Inc. | PDS-1566 | PD00000147 | (09/19)

2021 EPA Tier 3 Exhaust Emission Compliance Statement C200D6D Stationary Emergency

60 Hz Diesel Generator Set

Compliance Information:

The engine used in this generator set complies with Tier 3 emissions limit of U.S. EPA New Source Performance Standards for stationary emergency engines under the provisions of 40 CFR 60 Subpart IIII.

Engine Manufacturer:	Cummins Inc.
EPA Certificate Number:	MCEXL0409AAD-019
Effective Date:	06/8/2020
Date Issued:	06/8/2020
EPA Engine Family (Cummins Emissions Family):	MCEXL0409AAD

Engine Information:

Model:	QSB7-G5 NR3	Bore:	4.21 in. (106.9 mm)
Engine Nameplate HP:	324	Stroke:	4.88 in. (124 mm)
Type:	4 Cycle, In-line, 6 Cylinder Diesel	Displacement:	408 cu. in. (7 liters)
Aspiration:	Turbocharged and Charge Air Cooled	Compression ratio:	17.2:1
Emission Control Device:		Exhaust stack diameter:	4 in. (101.6)

Diesel Fuel Emission Limits

D2 Cycle Exhaust Emissions

	Grams per BHP-hr			Grams per kWm-hr		
	NO_X + NMHC	CO	PM	NO_X + NMHC	CO	PM
Test Results	3.0	0.7	0.08	4.0	1.0	0.11
EPA Emissions Limit	3.0	2.6	0.15	4.0	3.5	0.20

Test methods: EPA emissions recorded per 40 CFR Part 60, 89, 1039, 1065 and weighted at load points prescribed in the regulations for constant speed engines.

Diesel fuel specifications: Cetane number: 40-50, Reference: ASTM D975 No. 2-D, 300-500 ppm Sulphur

Reference conditions: Air Inlet Temperature: 25 °C (77 °F), Fuel Inlet Temperature: 40 °C (104 °F). Barometric Pressure: 100 kPa (29.53 in Hg), Humidity: 10.7 g/kg (75 grains H2O/lb) of dry air; required for NOx correction, Restrictions: Intake Restriction set to a maximum allowable limit for clean filter; Exhaust Back Pressure set to a maximum allowable limit..

Tests conducted using alternate test methods, instrumentation, fuel or reference conditions can yield different results. Engine operation with excessive air intake or exhaust restriction beyond published maximum limits, or with improper maintenance, may result in elevated emission levels.

NEW MEXICO
ENVIRONMENT DEPARTMENT

Air Quality Bureau

525 Camino de los Marquez, Suite 1
Santa Fe, New Mexico, 87505
Phone (505) 476-4300 Fax (505) 476-4375
www.env.nm.gov

SUSANA MARTINEZ
Governor
JOHN A. SANCHEZ
Lieutenant Governor

RYAN FLYNN
Cabinet Secretary-Designate
BUTCH TONGATE
Deputy Secretary

TECHNICAL MEMORANDUM

DATE: September 9, 2013

TO: All Permitting Staff

FROM: Daren Zigich

THROUGH: Ted Schooley, Permit Program Manager
Ned Jerabek, Major Source Section Manager

SUBJECT: Calculating TSP, PM-10 and PM-2.5 from Cooling Towers

The goal of this memo is to offer a Department approved step-by-step approach for calculating particulate emissions from cooling towers. While the Department encourages using this approach, other approaches, that do not use a droplet settling ratio may be approved on a case-by-case basis.

Due to the variability of methods used by permittees to estimate particulate emissions from cooling towers, a consistent, defensible approach is warranted. For example, some permittees have used a droplet settling ratio from Reference 3 to lower the total potential emissions rate of total particulate matter (PM_{total}). This is unacceptable due to the following:

1. Particulate settling is not appropriate since any verification testing would be completed inside the cooling tower fan stack. All particulate mass that can be measured by an EPA reference method and are emitted to the atmosphere shall be counted as particulate emissions. Particle size distribution can then be used to modify the emission rate of each regulated particulate size.
2. The Department is not aware of information that verifies the droplet settling data is representative for arid climates where evaporation rates are high.
3. The droplet size distribution and % mass data from Reference 1 only consider droplets up to 600 microns. Reference 3 states that settling only exists for droplets greater than 450 microns. Reference 1 lists the % mass of droplets greater than 450 microns to be less than 1 percent of the total mass.

4. Reference 2 test data shows that towers with significant drift droplet diameters greater than 600 microns usually suffer from poor installation of the drift eliminator or from poor water distribution due to issues with the tower packing. Large droplets may indicate that the assumed or guaranteed drift eliminator efficiency is not being met. Providing emissions credit for poor installation, operation or maintenance runs counter to general Department practice.
5. References 1 and 2 make no reference to and assign no credit for the settling theory stated in Reference 3.

For the above reasons, the Reference 3 settling ratio is not an acceptable emissions reduction approach.

Acceptable Calculation Method

Cooling tower particulate emissions are a function of the Drift rate and the concentration of dissolved solids present in the water. The Drift rate is normally listed as a percentage of the circulating water flow rate of the cooling tower.

Step 1 – Establish maximum water circulation rate (Q_{circ}) for the cooling tower. This is usually dependent on the capacity of the circulation pumps and the plant cooling system and should be reported as gallons per minute (gpm). The circulation rate is the sum of the circulation rates for each cell in the tower and thus represents the total flow for the tower.

Step 2 – Establish Drift rate (Q_{drift}) of the cooling tower. This information is dependent on the drift eliminator design and is usually supplied by the tower manufacturer. If manufacturer data is unavailable, the standard drift of 0.02 percent, listed in AP-42, should be used.

Step 3 – Establish maximum Total Dissolved Solids concentration (TDS) in the circulating cooling water. This is dependent on the facility's operations. TDS should be reported as parts per million (ppm) or mg/l.

Step 4 – Calculate total potential hourly particulate emissions (PM_{total}) in pounds per hour (lbs/hr).

$$PM_{total} = TDS(mg/l) \times \frac{1(lbs/mg)}{453{,}600} \times 3.785(l/gal) \times Q_{circ}(gpm) \times \frac{Q_{drift}(\%Q_{circ})}{100} \times 60(min/hr)$$

Example: TDS = 3000 ppm or mg/l, Q_{circ} = 50,000 gpm, Q_{drift} = 0.004%

PM_{total} = 3000 x (1/453,600) x 3.785 x 50,000 x (0.004/100) x 60

PM_{total} = 3.0 lbs/hr

Step 5 – Estimate particulate size distribution of the PM_{total} to determine potential emissions of TSP/PM, PM_{10} and $PM_{2.5}$.

The current estimating technique used in References 1 and 2 employs a formula for determining a potential particulate size (i.e. diameter) for a given set of variables. The variables are:

d_d = Drift droplet diameter, microns
C_{TDS} = Concentration of TDS in the circulating water, ppm x 10^{-6}
ρ_w = Density of Drift droplet, g/cm^3
ρ_{salt} = Density of particle, g/cm^3

The equation for determining particle size/diameter (d_p), in microns is:

$$d_p = \frac{d_d}{(\rho_{salt} / \rho_w C_{TDS})^{1/3}}$$

The tables below list particle size related to droplet size for various concentrations (1000 ppm to 12,000 ppm) of TDS in the circulating cooling water. The density of the water droplet (ρ_w) is assumed to be 1.0 g/cm3 (based on density of pure water) and the average density of the TDS salts is assumed to be 2.5 g/cm3. This assumed density is selected based on the average density of common TDS constituents, $CaCO_3$, $CaSO_4$, $CaCl_2$ NaCl, Na_2SO_4, and Na_2CO_3. If actual circulating water constituents are available, that data may be used to estimate the dissolved solids average density.

To determine the droplet size that generates particulate matter of the applicable regulated diameters, TSP/PM (defined as 30 microns or less per NM AQB definition[1]), PM10 and PM2.5, find the column in the table that matches the maximum circulating water TDS concentration and read the values associated with the PM2.5, PM10 and TSP/PM boxes. Boxed values are not exactly equal to the applicable sizes, but are the values greater than and closest to the applicable sizes, given the listed water droplet values from Reference 1.

The far right column of each table provides mass distribution data from Reference 1. The values indicate what percent of the total particulate mass emission, calculated in Step 4, is associated with the applicable particulate size. Read the value that is on the same line (same color) as the applicable particulate size associated with the specified TDS concentration column.

Note: Although the relationship between droplet size and percent mass is not linear, a linear interpolation of the tabulated data is acceptable between two adjacent rows (particle size) to determine an estimate of percent mass for a specific particle size (i.e. PM30, PM10 and PM2.5). Particle sizes for droplets with a non-listed TDS ppm concentration may be calculated using the equation in Step 5.

Example: Continuing from Step 4,

PM_{total} = 3.0 lbs/hr
C_{TDS} = 3000 ppm

From Table:

$PM_{2.5}$:	d_d = 30	%Mass = 0.226%
PM_{10}:	d_d = 110	%Mass = 70.509%
TSP/PM:	d_d = 270	%Mass = 96.288%

The mass emission of each applicable particulate size is:

$PM_{2.5} = PM_{total}(\%Mass/100) = 3.0(0.00226) = 0.007$ lbs/hr
$PM_{10} = 3.0(.70509) = 2.115$ lbs/hr
TSP/PM = 3.0(.96288) = 2.889 lbs/hr

[1]Definition of TSP for purposes of permitting emission sources, 11/2/09, see P:\AQB-Permits-Section\NSR-TV-Common\Permitting-Guidance-Documents – Index & Links document

Size Distribution

1000 ppm (TDS)		2000 ppm		3000 ppm		% Mass
d_d	d_p	d_d	d_p	d_d	d_p	≤
10	0.7387304	10	0.930527	10	1.0650435	0
20	1.4774608	20	1.8610539	20	2.130087 PM2.5	0.196
30	2.2161912	30	2.7915809 PM2.5	30	3.1951306 PM2.5	0.226
40	2.9549216 PM2.5	40	3.7221079	40	4.2601741	0.514
50	3.693652	50	4.6526349	50	5.3252176	1.816
60	4.4323825	60	5.5831618	60	6.3902611	5.702
70	5.1711129	70	6.5136888	70	7.4553046	21.348
90	6.6485737	90	8.3747427	90	9.5853917	49.812
110	8.1260345	110	10.235797 PM10	110	11.715479 PM10	70.509
130	9.6034953	130	12.096851	130	13.845566	82.023
150	11.080956 PM10	150	13.957905	150	15.975653	88.012
180	13.297147	180	16.749485	180	19.170783	91.032
210	15.513339	210	19.541066	210	22.365914	92.468
240	17.72953	240	22.332647	240	25.561045	94.091
270	19.945721	270	25.124228	270	28.756175	94.689
300	22.161912	300	27.915809	300	31.951306 TSP/PM30	96.288
350	25.855564	350	32.568444 TSP/PM30	350	37.276523	97.011
400	29.549216	400	37.221079	400	42.601741	98.34
450	33.242868 TSP/PM30	450	41.873714	450	47.926958	99.071
500	36.93652	500	46.526349	500	53.252176	99.071
600	44.323825	600	55.831618	600	63.902611	100

Albuquerque Bernalillo County Water Utility Authority

Water Quality Report 2020

Distribution

Definitions & Terms Notes & Sources of Substances

Zone 6

Metals	Sample Collection Years	Units	Zone Average	City Average	City Range	MCL	MCLG
Arsenic	2017 - 2020	PPB	0	3	0.0 - 8.0	10	0
Barium	2017 - 2020	PPM	0.1	0.1	0.0 - 0.2	2	2
Chromium	2020	PPB	0	0.8	0.0 - 7.0	100	100

Minerals	Sample Collection Years	Units	Zone Average	City Average	City Range	MCL	MCLG
Fluoride	2017 - 2020	PPM	0.7	0.6	0.4 - 1.2	4	4

Nutrients	Sample Collection Years	Units	Zone Average	City Average	City Range	MCL	MCLG
Nitrate + Nitrite as Nitrogen	2019 - 2020	PPM	0.15	0.46	0.0 - 2.84	10	10

Organic	Sample Collection Years	Units	Zone Average	City Average	City Range	MCL	MCLG
Total Xylenes	2020	PPM	0	0.0731	0.0 - 0.65	10	10

Radionuclides	Sample Collection Years	Units	Zone Average	City Average	City Range	MCL	MCLG
Gross Alpha Particle Activity	2017 - 2020	pCi/L	0	0.8	0.0 - 2.5	15	0
Radium 226 + 228	2017 - 2020	pCi/L	0.06	0.16	0.0 - 0.41	5	0
Uranium, Mass Concentration	2017 - 2020	PPB	0	2	0.0 - 9.0	30	0

Voluntary Comprehensive Monitoring in Distribution

(Samples taken every three months, 2020 results)

General Chemistry	Sample Collection Years	Units	Minimum	Average	Maximum	City Average	City Range	MCL
Alkalinity	2020	PPM as CaCO3	98	117	132	119	44.0 - 352.0	~
Bicarbonate	2020	PPM as CaCO3	98	117	131	118	43.0 - 349.0	~
Calcium	2020	PPM	45	49.25	52	46.79	11.0 - 70.0	~
Chloride	2020	PPM	17.81	23.04	31.06	30.11	9.11 - 55.8	250 a
Conductivity	2020	uS/cm	345	419.8	455	457.6	345.0 - 602.0	
Free Chlorine	2020	mg/L	0.7	0.9	1.2	0.9	0.3 - 1.5	
Hardness	2020	grains/ gallon	7.85	8.63	9.21	8.27	2.04 - 11.96	~
Magnesium	2020	PPM	5.3	5.98	6.7	5.97	1.8 - 9.0	~
pH	2020	Std. unit	7.75	7.8	7.85	7.82	7.29 - 8.72	~
Potassium	2020	PPM	3	3	3	4	2.0 - 8.0	~
Silica	2020	PPM as SiO2	23.6	32.1	36.4	37.4	16.5 - 68.5	~
Sodium	2020	PPM	23	25	27	33	19.0 - 81.0	~
Sulfate	2020	PPM	54	57	60	62	24.0 - 108.0	250 a
Temperature	2020	Fahrenheit	54	61	71	64	39.0 - 86.0	~
Total Dissolved Solids	2020	PPM	240	263	282	284	142.0 - 388.0	500 a

Metals	Sample Collection Years	Units	Minimum	Average	Maximum	City Average	City Range	MCL
Arsenic	2020	PPB	0	4	6	3	0.0 - 8.0	10
Chromium	2020	PPB	0	0	0	0.5	0.0 - 6.0	100
Iron	2020	PPM	0	0	0	0	0.0 - 0.1	0.3 a

Minerals	Sample Collection Years	Units	Minimum	Average	Maximum	City Average	City Range	MCL
Fluoride	2020	PPM	0.4	0.5	0.6	0.6	0.4 - 0.9	4

Nutrients	Sample Collection Years	Units	Minimum	Average	Maximum	City Average	City Range	MCL
Nitrate	2020	PPM	0.27	0.49	0.73	0.46	0.0 - 3.46	10

a- Represents the USEPA Secondary Maximum Contaminant Level (SMCL). Secondary Drinking Water Standards are unenforceable federal guidelines regarding taste, odor, color and certain other non-aesthetic effects of drinking water. USEPA recommends them as reasonable goals, but federal law does not require water systems to comply with them.

1.3 Submittals

Shop Drawing, List of:

Section Data

UPDATE™ Version 6.12.4
Product Data: 2/19/2021 (Current)
2/28/2021 3:32:27 PM

Job Information

Selected by

James, Cooke and Hobson INC	Chuck Espinosa, PE
3810 Academy Park Way S NE	Tel 505-344-7100
Albuquerque, NM 87109 US	DCE@JCHINC.COM

Cooling Tower Definition

Manufacturer	Marley	Fan Motor Speed	1800 rpm
Product	NC Steel	Required Fan Motor Output per cell *	45.27 BHp
Model	NC8413UAN3	Required Fan Motor Output total *	135.81 BHp
Cells	3	Fan Motor Capacity per cell	50.00 Hp
CTI Certified	Yes	Fan Motor Output per cell	50.00 BHp
Fan	11 ft, 6 Blades, Low Sound	Fan Motor Output total	150.00 BHp
Fan Speed	323 rpm, 11162 fpm	Air Flow per cell	239700 cfm
Fans per cell	1	Air Flow total	719200 cfm
Fill Type	MX75	Static Lift	23 ft
		Distribution Head Loss	0 ft
		ASHRAE 90.1 Performance	69.1 gpm/Hp

Model Group: Standard Low Sound (A)

* Required Fan Motor Output assumes VFD operation

Conditions

Tower Water Flow	6723 gpm	Air Density In	0.07272 lb/ft³
Hot Water Temperature	85.00 °F	Air Density Out	0.07250 lb/ft³
Range	10.00 °F	Humidity Ratio In	0.01165
Cold Water Temperature	75.00 °F	Humidity Ratio Out	0.02246
Approach	6.80 °F	Wet-Bulb Temp. Out	80.18 °F
Wet-Bulb Temperature	68.20 °F	Estimated Evaporation	66 gpm
Relative Humidity	50 %	Total Heat Rejection	33538000 Btu/h
Capacity	103.1 %		

- This selection satisfies your design conditions.

Weights & Dimensions

	Per Cell	Total
Shipping Weight	18500 lb	55400 lb
Heaviest Section	10200 lb	
Max Operating Weight	40800 lb	122500 lb
Width	22'-5"	22'-5"
Length	11'-10 ¾"	36'-3 ¼"
Height	22'-7 ¼"	

Minimum Enclosure Clearance

Clearance required on air inlet sides of tower without altering performance. Assumes no air from below tower.

Solid Wall	11 ft
50 % Open Wall	6 ft

Weights and dimensions do not include options; refer to sales drawings. For CAD layouts refer to file 8413_ALN.dxf

Cold Weather Operation

Heater Sizing (to prevent freezing in the collection basin during periods of shutdown)

Heater kW/Cell	30.0	24.0	18.0	15.0	12.0	9.0	7.5
Ambient Temperature °F	-28.74	-14.24	0.27	7.52	14.77	22.02	25.65

1.3 Submittals

Shop Drawing, List of:

Supporting Steel

Shipping Weight		Design Operating Loads			Wind Load		Seismic Load	
per Tower	Heaviest Lift	per Tower	per Cell	at A	Vert. Reaction at A	Horiz. Reaction at A	Vert. Reaction at A	Horiz. Reaction at A
65160 lb (29556 kg)	11171 lb (5067 kg)	132258 lb (59991 kg)	44086 lb (19997 kg)	12108 lb (5492 kg)	238.2 x P lb (22.13 x P kgf)	125.11 x P lb (11.62 x P kgf)	25999 x G lb (11793 x G kgf)	14930 x G lb (6772 x G kgf)

(8) 3/4" ASTM A307 or M20 Grade 4.6 anchor bolts are required per cell. These anchor bolts are capable of resisting 60 psf (2873 N/m²) wind load or 0.5 G seismic load applied to the tower. Wind and Seismic capacities are un-factored loads as determined by ASCE7-10. Determination of the site specific design wind and seismic loads are by others.

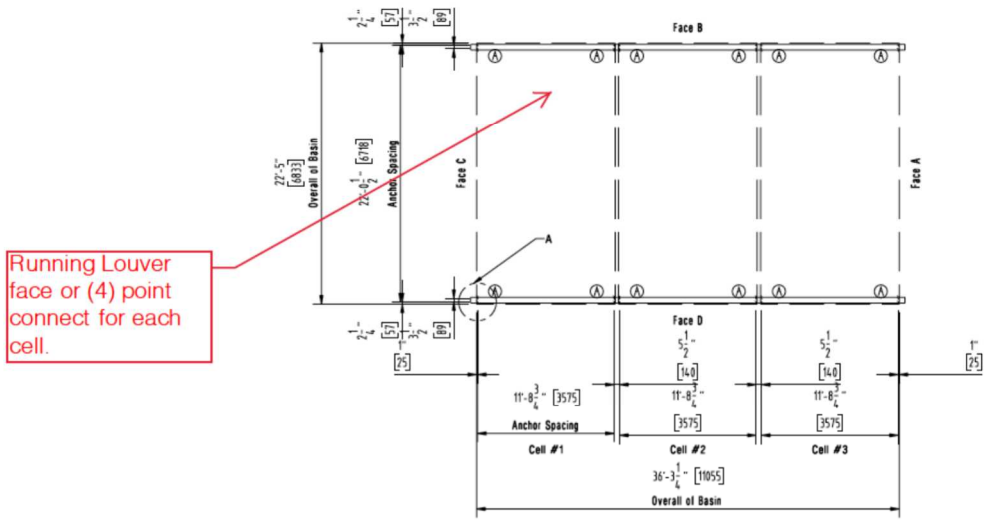

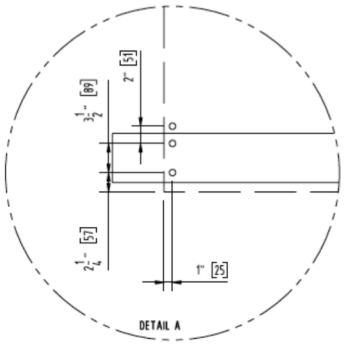

The first anchor bolt hole is the closest to the end of the cold water basin flange. The second anchor bolt should use the hole that matches the gauge of the beam.

NOTES

1. SUPPORTING STEEL: The supporting steel is to be designed, constructed and furnished by the customer. It shall include customer supplied anchor bolts to suit the general dimensions of this drawing and of the Outlet Piping Plan drawing. The top surface of the supporting steel must be framed flush and level. The maximum beam deflection shall be limited to 1/360 of span, not to exceed 1/2" (13 mm) at the anchor bolts in order to assure that the cooling tower is level and plumb.
2. DESIGN OPERATING LOADS: The design operating loads shown in the above table are based upon the volume of water in the collection basin at shutdown. The shutdown water level has been sized to accommodate the maximum allowable flow rates. The design loads are shown for your use as a quick reference. The actual operating load is variable, and dependent upon the design flow rate per cell. Design loads are all based upon the recommended operating water level. Operating levels in excess of that recommended will result in loads exceeding the values stated. Consult a SPX CT representative for greater detail on this or any other subject.
3. WIND & SEISMIC LOADS: Reactions shown are the result of the wind/seismic load being applied perpendicular to the face of the tower structure. Loads are additive to the operating loads. Wind reactions can be calculated by multiplying by P, which is the wind pressure in psf for Imperial units and kgf/m² for metric units. Seismic reactions can be calculated by design G.
4. SHIPPING WEIGHTS AND MAXIMUM OPERATING LOADS: Values shown in table include the optional equipment weights.
5. NON-STANDARD ANCHORAGE LOCATION: The anchor bolt dimension shown can be varied upon request. Consult a SPX CT representative for specifics and to ensure that the appropriate modifications are added to the structure.
6. PIER SUPPORTS: The tower may be supported from piers at each anchor bolt location as an alternate. A pier should be at least 6" (152 mm) x 6" (152 mm).
7. VIBRATION ISOLATORS: The towers may be supported on vibration isolators. The isolators must be placed UNDER the supporting steel beams and not between the support beams and the tower.
8. The tower assembly tolerance applicable to all dimensions is + or - 1/8" (3 mm). Consult suppliers of supporting structure for construction tolerances.
9. The units of measure are in IP (SI) units unless otherwise noted.

NC8413UAN3BGF - Supporting Steel Plan and Details
UNM Parking Garage
Albuquerque, NM, United States

MARLEY

DRAWN BY	CHECKED	REV BY	REV CHK	DATE	APPROVED	DRAWING NUMBER	REV.
chuck espinosa_210228_142610852 V1	QTC			03/30/21	SYS	CE775938G	

(C) AS OF DATE(S) IN TITLE BLOCK SPX COOLING TECHNOLOGIES, INC. UNPUBLISHED. ALL RIGHTS RESERVED UNDER COPYRIGHT LAWS

1.3 Submittals

Shop Drawing, List of:

Schematic Case Face Elevation

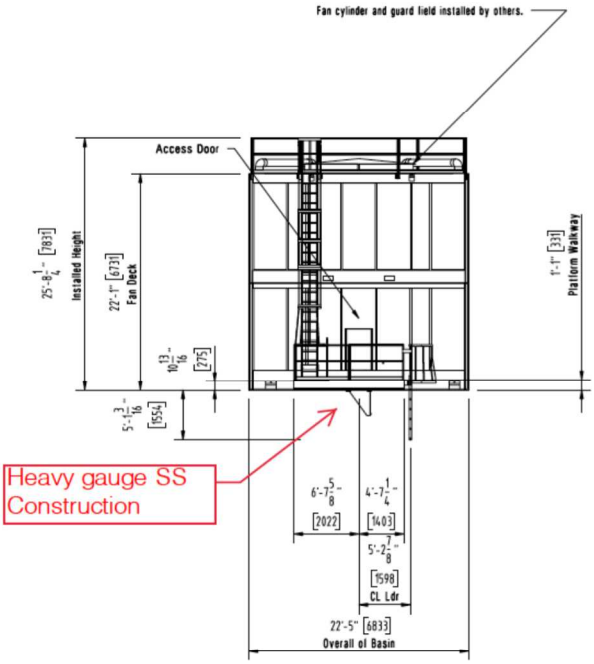

Cased Face C

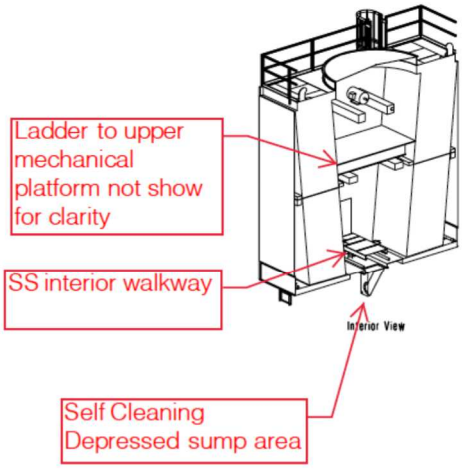

NOTES

1. The fan motor must be locked out and inoperable before entering the tower. This warning has been placed on the access door.
2. The internal inlet piping, including flat face flange gaskets, which starts at the face of the inlet connection is provided by SPX CT. The piping external to the tower and its supports are provided by others. The external piping may not be supported from the tower.
3. The external inlet piping at the top of the tower is provided by SPX CT and installed in the field by others. This piping can be an obstacle to personnel on top of the tower. The installation detail drawings are included in the Literature Package shipped with the tower.
4. Multi-cell towers should include provisions to balance flow between cells.
5. The internal vertical riser will apply an additional vertical operating load of 1050 lb (476 kg) at the bottom inlet flange attachment to the external piping which is supported by others.
6. To ensure maximum thermal performance the cooling tower must be installed level and plumb. Both of the air inlet faces must have adequate air supply. If obstructions exist, consult your SPX CT representative.
7. Contact your SPX CT sales engineer for the required pump head for this inlet arrangement.
8. Hoisting clips are provided for ease of unloading and positioning. For overhead lifts or where additional safety precautions are prudent, add slings beneath the tower. Adequate space has been provided for removal of the shackles and the 5 1/4" (133 mm) long pins from the hoist clips between the cells of a multi-cell tower. If the pin used is longer than 5 1/4" (133 mm), the cell may be slid into it's final position by using come-alongs at the base of the unit, after removal of shackle pins. See Hoisting Details drawing.
9. Flanged connections conform to Class 125 ANSI B16.1 specification. The bolt holes straddle the centerlines.
10. Construction of the ladder and guardrail: The guardrail is fabricated from galvanized structural tubing. Top rail, middle rail and posts are 1 1/2" (38 mm) square tube 1/8" (3 mm) thick. Toeboards are 12 gauge heavy mill galvanized steel. The ladder is aluminum 3" (76 mm) x 1 1/8" (29 mm) I-beam side rails and 1 1/4" (32 mm) serrated rungs.
11. The ladder and guardrail are field installed by others. The tower is shop modified to accept this option. The clips and hardware are provided by SPX CT for the field installation. The installation detail drawings are included in the literature package shipped with the tower.
12. Ladder extensions are provided in nominal lengths of 5' [1524mm] and 11' [4572mm] only. Field modification by others is required for extensions of different lengths. Anchorage of the bottom of the ladder extension for proper stability is by others.
13. The Plenum Walkway consists of 11 gauge steel supports and 16 gauge steel walkway panels. The elevation of the Plenum Walkway is above the overflow water level of the collection basin. The distance from the top of the Plenum Walkway to the fan is 18'-4 7/8" (5610 mm).
14. The Interior Mechanical Equipment Platform consists of the Plenum Walkway plus an elevated platform for access to the mechanical equipment. A ladder is provided from the Plenum Walkway to the elevated platform along with a handrail system for the elevated platform.
15. The distance from the elevated platform to the fan exceeds 7'-0 13/16" (2154 mm).
16. O.S.H.A. standards recommend the use of an Access Door Platform if the door is 4'-0" (1219 mm) or higher above grade.
17. The access door platform is designed for use with the Ladder and Handrail Option. The tower has been shop modified to accept this option. The assembly of the SPX CT supplied components is to be made in the field by others. The details of assembly are included in the Literature Package shipped with the tower.
18. Single inlet options (side or bottom inlet) - This piping can be an obstacle to personnel on top of the tower.
19. The tower assembly tolerance applicable to all dimensions is + or - 1/8" (3 mm). Consult suppliers of supporting structure for construction tolerances.
20. The units of measure are in IP (SI) units unless otherwise noted.

NC8413UAN3BGF - Schematic Cased Elevation and Notes
UNM Parking Garage
Albuquerque, NM, United States

MARLEY

ORDER

1.3 Submittals

Shop Drawing, List of:

Piping Plan

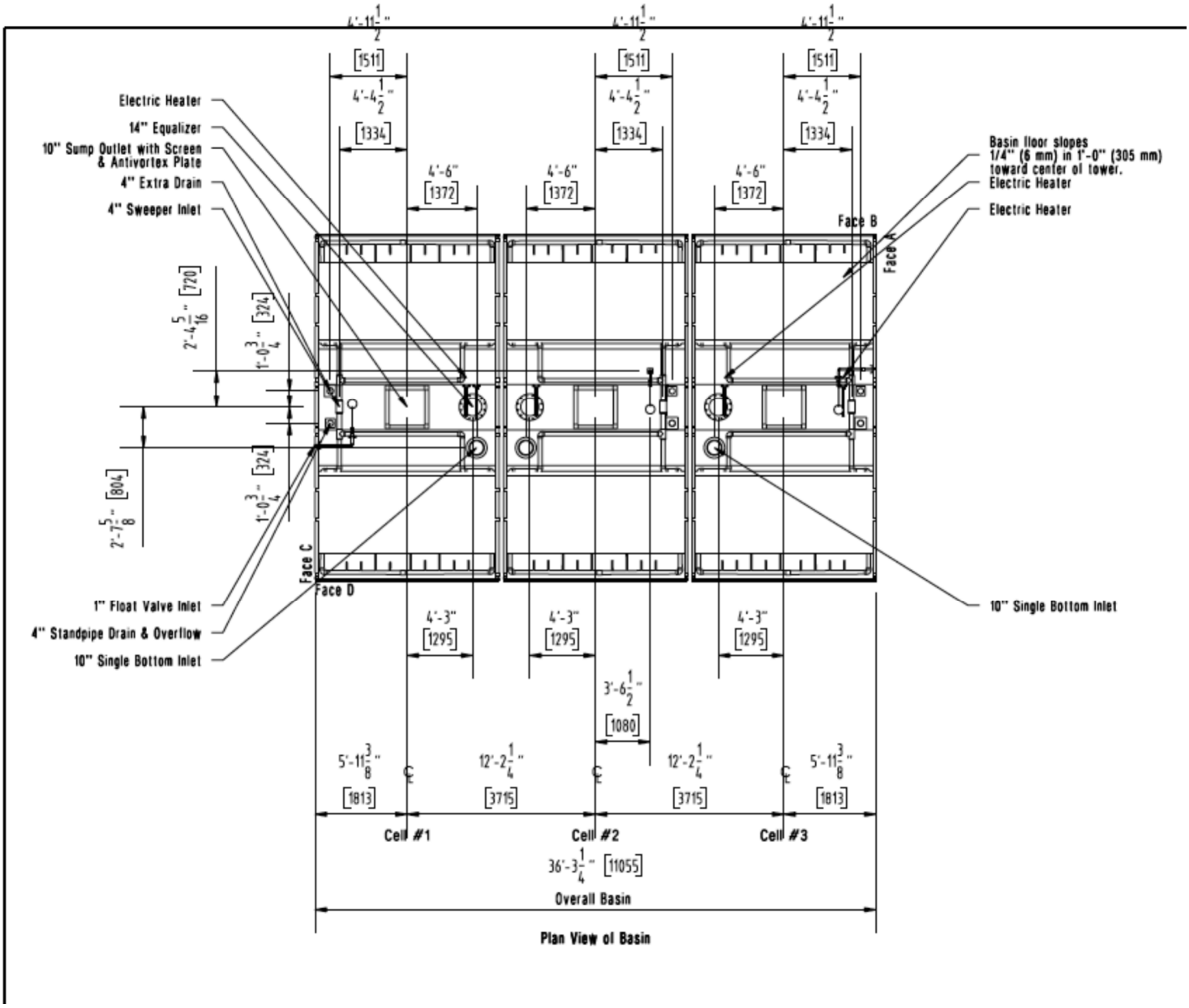

1.3 Submittals

Shop Drawing, List of:

Schematic Plan and Louver Elevation

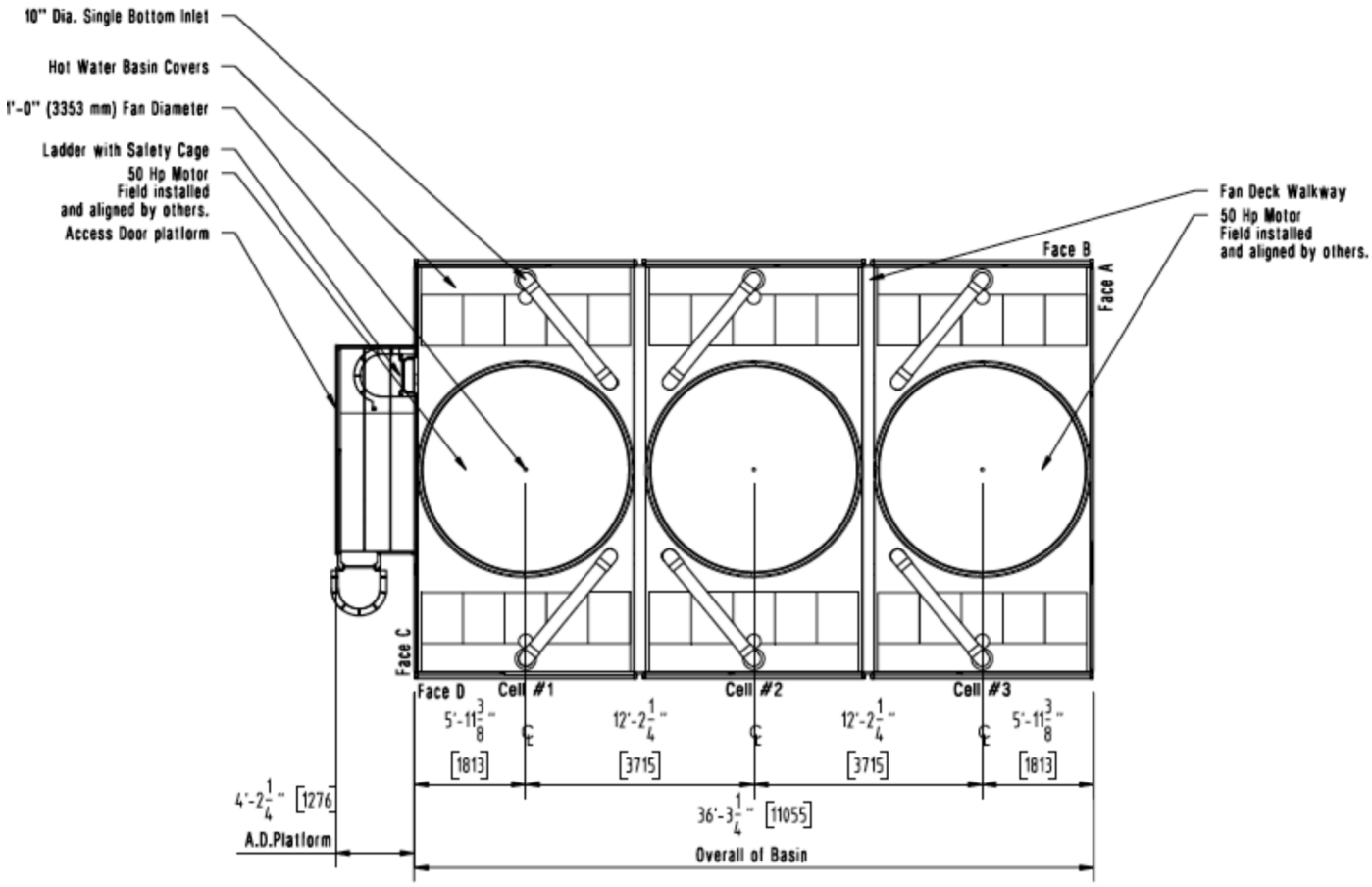

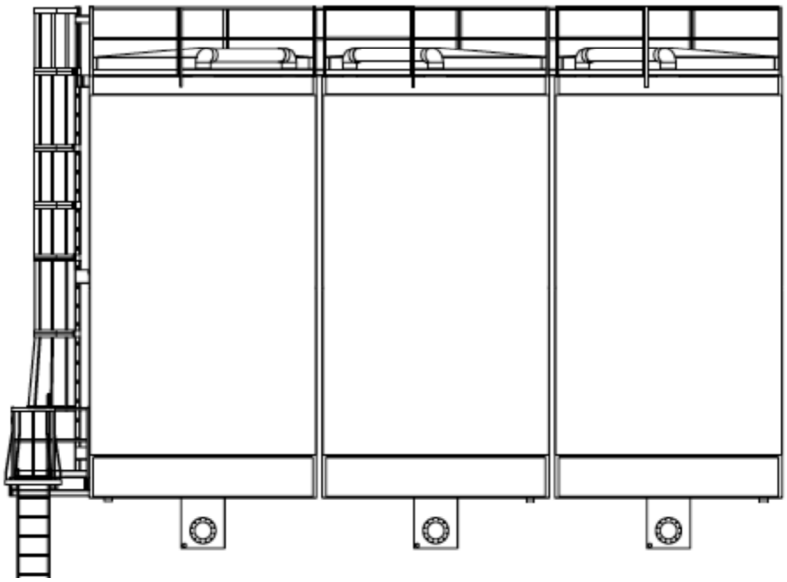

1.3 Submittals

Shop Drawing, List of:

SS Side Outlet sump details

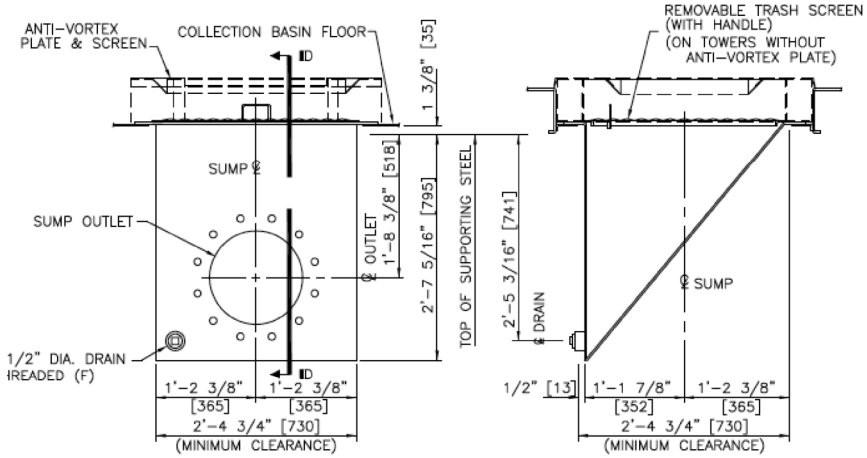

ELEVATION VIEW

SECTION D-D

STEEL SIDE OUTLET SUMP

NOTE: SUMP MAY BE ROTATED 90° OR 180°

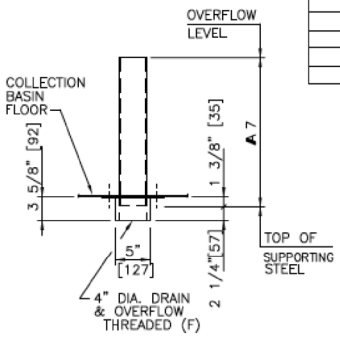

STANDARD STANDPIPE DRAIN & OVERFLOW

(TYPICAL ALL CELLS)

TOWER MODEL	DIMENSIONS
	A7
8401	1'-3" [381]
8402	1'-3" [381]
8403	1'-5 1/4" [438]
8405	1'-5 1/4" [438]
8407	1'-5 1/4" [438]
8409	1'-5 1/4" [438]
8410	1'-7 3/8" [492]
8411	1'-9 1/4" [540]
8412	1'-9 1/4" [540]
8413	1'-11 1/4" [591]
8414	1'-11 1/4" [591]

3. OPERATIONAL PLAN – AIR EMISSIONS DURING SSM

The UNMH facility is owned and operated by University of New Mexico Hospitals. As soon as a malfunction occurs, the facility will shut down applicable equipment as soon as possible to ensure no excess emissions or non-permitted emissions are released. The facility will only startup again once it is identified that the malfunction is addressed, and the facility will operate as normal and permitted.

Additional details are provided in this section for each piece of equipment regarding specific steps UNMH will take should any malfunction occur on site as well as details regarding safety procedures and processes to ensure protection of employees, the general public, and the environment.

Complete operational and maintenance manuals can be provided by request of the department. These manuals total over 500 pages and are excluded for that reason.

3.1 Emergency Generator Operational Plan

3.1.1 Emergency Generator Startup Procedure

A startup event for a Reciprocating Internal Combustion Engine (RICE) occurs when the unit is initially operated after being off. UNMH carefully monitors the entire startup process to ensure safety and minimize airborne emissions.

The following actions included in the operational plan are critical for minimizing emissions during startup:

- Minimizing cold engine startups. UNMH ensures warm engine startup by ensuring engine block heaters are online. These units are checked on a weekly basis.
- Ensuring the engine is achieving good combustion.
- Monitoring the opacity and color of the exhaust gasses and taking the unit offline for repairs upon the observation of abnormal soot coming out of the stacks.

3.1.2 Emergency Generator Shutdown Procedure

A shutdown event for a RICE occurs when the unit is shut down after a period of operation. UNMH carefully monitors the entire shutdown process to ensure safety and minimize airborne emissions.

The following actions included in the operational plan are critical for minimizing emissions during engine shutdown:

- Removing the full electrical load from the system and initiating a cool down cycle before the engine is stopped.
- Monitoring the opacity and color of the exhaust gasses and taking the unit offline for repairs upon the observation of abnormal soot coming out of the stacks.

3.1.3 Emergency Generator Maintenance

UNMH ensures the emergency generator RICE are appropriately maintained according to the manufacturer's recommendations. UNMH carefully monitors the engines to ensure safety and minimize airborne emissions during regularly scheduled maintenance events.

The following actions included in the maintenance operational plan are critical for minimizing emissions during the event:

- Ensure the engine is achieving good combustion during the maintenance activity;
- Monitoring the opacity and color of the exhaust gasses and taking the unit offline for repairs upon the observation of abnormal soot coming out of the stacks.

3.2 Boiler and Cooling Tower Operational Plans

UNMH operates and maintains the boilers and cooling towers per the manufacturer's recommended guidance. UNMH ensures that preventive maintenance is completed on each boiler and cooling tower at least once per year.

If there are any malfunction or upset events, UNMH will shut down the boiler or cooling tower immediately to remedy any problems and minimize any emissions released. There are multiple boilers and cooling towers associated with existing and new hospital operations. These existing units are all connected to the same system and the proposed units will be connected to the same system so that disruptions are minimized.

The new proposed boilers will operate in a specific N+1 redundancy system. In other words, only 3 units will be operational simultaneously while one unit will always be designated for back-up. If any unit experiences a malfunction, it will be immediately shut off and the additional unit will be engaged to ensure no disruption in service while minimizing emissions to the air. At no point in time while all four boilers be operational at the same time.

Cooling towers will be operated in accordance with manufacturer guidance and will be shut down immediately in the event of a malfunction or upset. The unit will not be started up again until the malfunction is addressed and UNMH ensures that no excess emissions will be emitted as a result of startup.

4. AIR DISPERSION MODELING ANALYSIS

AIR DISPERSION MODELING REPORT

Construction Permit Modification Application

#0953-M4-2TR

University of New Mexico Hospitals (UNMH)
University of New Mexico Hospital

Prepared By:

Michael Celente – Senior Consultant

Trinity Consultants, Inc
9400 Holly Ave NE
Building 3, Suite 300
Albuquerque, NM 87122
(505) 266-6611

July 2022

Project 203201.0119

TABLE OF CONTENTS

1. APPLICANT AND CONSULTANT INFORMATION **1**
- a) Name of Facility and Company 1
- b) Permit Numbers 1
- c) Contact Information for Modeling Questions 1

2. FACILITY AND OPERATIONS DESCRIPTION **2**
- a) Narrative Summary of Modification 2
- b) Physical Description 2
- c) Duration of Time to be Located on Site 3
- d) Facility Maps 3

3. MODELING REQUIREMENTS DESCRIPTION **4**
- a) List of Pollutants Requiring Modeling 4
- b) Additional Modeling Required 4

4. MODELING INPUTS **5**
- a) General Modeling Approach 5
  - *i. Models Used and Justification 5*
  - *ii. Operational Flexibility (During Normal Operation) 5*
  - *iii. Source Groups 6*
  - *iv. Hourly Emission Factors 6*
  - *v. Gravitational Settling/Plume Depletion 6*
  - *vi. Reduction of NO_X to NO_2 ..... 7*
  - *vii. Background Concentrations 7*
  - *viii. Demonstration of Compliance in Nearby Facilities 8*
- b) Meteorological and Ozone Data 9
  - *i. Discussion of Meteorological and Ozone Data 9*
  - *ii. Actual Data 9*
- c) Receptor and Terrain Discussion 9
  - *i. Spacing of Receptor Grids 9*
  - *ii. Terrain Discussion 10*
  - *iii. Reduction in Receptor Grid Size 10*
- d) Emission Sources 10
  - *i. Description of Sources at Facility 10*
- e) Building Downwash 12
  - *i. Dimensions of Buildings and Tanks 12*

5. MODELING FILES DESCRIPTION **14**
- a) List of Files 14
- b) Description of Scenarios 14

6. MODELING RESULTS **15**
- a) Summary of Modeling Results 15
- b) Table of Cumulative Concentrations 15

7. SUMMARY AND CONCLUSIONS **16**
- a) Modeling Statement 16

LIST OF TABLES

Table 1. Pollutant Standards for Which Modeling Waivers Have Been Granted or That are Modeled to Demonstrate Compliance with the NAAQS/NMAAQS 4

Table 2. Results of Boiler Screening Model 5

Table 3. Department-Approved In-Stack Ratios (ISR) 7

Table 4. Background Concentrations 7

Table 5. Temporally Varying 1-hr NO_2 Background Data (μg/m^3) 8

Table 6. Point Source Stack Parameters 11

Table 7. Building Dimensions and Locations Discussion of Included Buildings 12

Table 8. Modeling Files and Description 14

Table 9. Model Results; Maximum Concentrations; SIL Comparison 15

Table 10. Cumulative vs. Ambient Air Quality Standards 15

1. APPLICANT AND CONSULTANT INFORMATION

This modeling report is being submitted as part of a permit modification application submitted pursuant to 20.2.11.41.29 NMAC for the UNM Hospital, which is owned and operated by the University of New Mexico Hospitals (UNMH). This report and accompanying modeling files are being submitted to the City of Albuquerque (CABQ) Environmental Health Department (EHD), Air Quality Program (AQP) to satisfy the requirements of 20.11.41.13.E NMAC. This report includes all required components requested in the "Completeness Requirements" section of the CABQ's Air Dispersion Modeling Guidelines (published October 2019).

a) Name of Facility and Company

Facility Name: University of New Mexico Hospital
Company: University of New Mexico Hospital (UNMH)

b) Permit Numbers

The facility operates under **ATC #0953-M4-2TR**

c) Contact Information for Modeling Questions

Contact Name: Michael Celente
Phone Number: (505) 266-6611
E-Mail Address: mcelente@trinityconsultants.com

2. FACILITY AND OPERATIONS DESCRIPTION

a) Narrative Summary of Modification

As part of this modification, UNMH proposes to construct a new hospital tower with a central utility plant (CUP) to support the new tower. A new parking structure will also be erected as part of this modification although it will not contain any sources of emissions. As part of this modification, UNMH proposes to permit four (4) additional boilers, four (4) diesel-fired back-up generators and three (3) cooling towers. All of these sources of emissions will be located in a central utility plant which will be located adjacent to a proposed parking structure. In addition, there are three (3) existing cooling towers associated with current hospital operations which will be added to this permit. Finally, the existing boilers (BLR-1A and BLR-2A) are being replaced by larger units rated at 23.43 MMBtu/hr – stack parameters are being modified for these units as part of the modification. Emissions are being updated for BLR-3B. Stack parameters and calculations are being updated for BLR-1A, BLR-2A, and BLR-3B based on the most recent operational and manufacturer data available from UNMH including updates to stack heights, temperatures, diameters, and exit velocities. These new values have been confirmed by operations and are the most representative of these existing units. Additional details are provided in the modeling report (Section 4) and calculation description (Section 2.3).

Based on recent operational needs and emergency power support requirements, in addition to the construction and commissioning of the new CUP units, UNMH is also requesting the addition of one (1) more additional emergency generator (UNMH-EG-10A) as part of this resubmittal which will be located next to the BBRP Facility. Although this emergency unit is not associated directly with CUP operations, it will be pivotal in supporting hospital operations including telecommunications when the New Hospital Tower is constructed.

As such, the proposed modifications include the following updates to the existing permit:

- Addition of four (4) dual-fired boilers rated at 6.0 MMBtu/hr (Units UNMH-BLR-3A through UNMH-BLR-6A);
- Addition of four (4) diesel-fired back-up generators rated at 2,922 hp (Units UNMH-EG-6A through UNMH-EG-9A);
- Addition of one (1) diesel-fired back-up generator rated at 324 hp (UNMH-EG-10A);
- Addition of three (3) cooling towers associated with the CUP rated at 6,723 gpm (Units CT-1 through CT-3);
- Addition of three (3) cooling towers associated with existing hospital operations rated at 2,400 gpm (Unit CT-4 through CT-6); and
- Replacement of existing BLR-1A and BLR-2A (rated at 17.04 MMBtu/hr) with new Hurst Boilers at a higher capacity (23.43 MMBtu/hr)
- Updates to emissions (specifically NO_X and HAP) for BLR-3B
- Updates to stack parameters and calculations for units BLR-1A, BLR-2A and BLR-3B including stack height increase for BLR-1A and BLR-2A.

b) Physical Description

The existing facility is currently located at 2211 Lomas Blvd. NE, Albuquerque, NM 87106. The new central utility plant will be located at 850 Yale Blvd. NE, Albuquerque, NM 87106 and the New Hospital Tower will be located at 1919 Lomas Blvd. NE, Albuquerque, NM 87131.

c) Duration of Time to be Located on Site

The facility will be at this location for greater than one (1) year.

d) Facility Maps

The following maps are included: map showing location of facility; on-site buildings; emission points; fence line; and property boundary.

The attached figures display an aerial image of the facility with labels of all emission points at the facility. Figures are also included which show the entire layout of buildings at the facility, an aerial image obtained from the City of Albuquerque's Advanced Map Viewer, and plot plans of the facility.

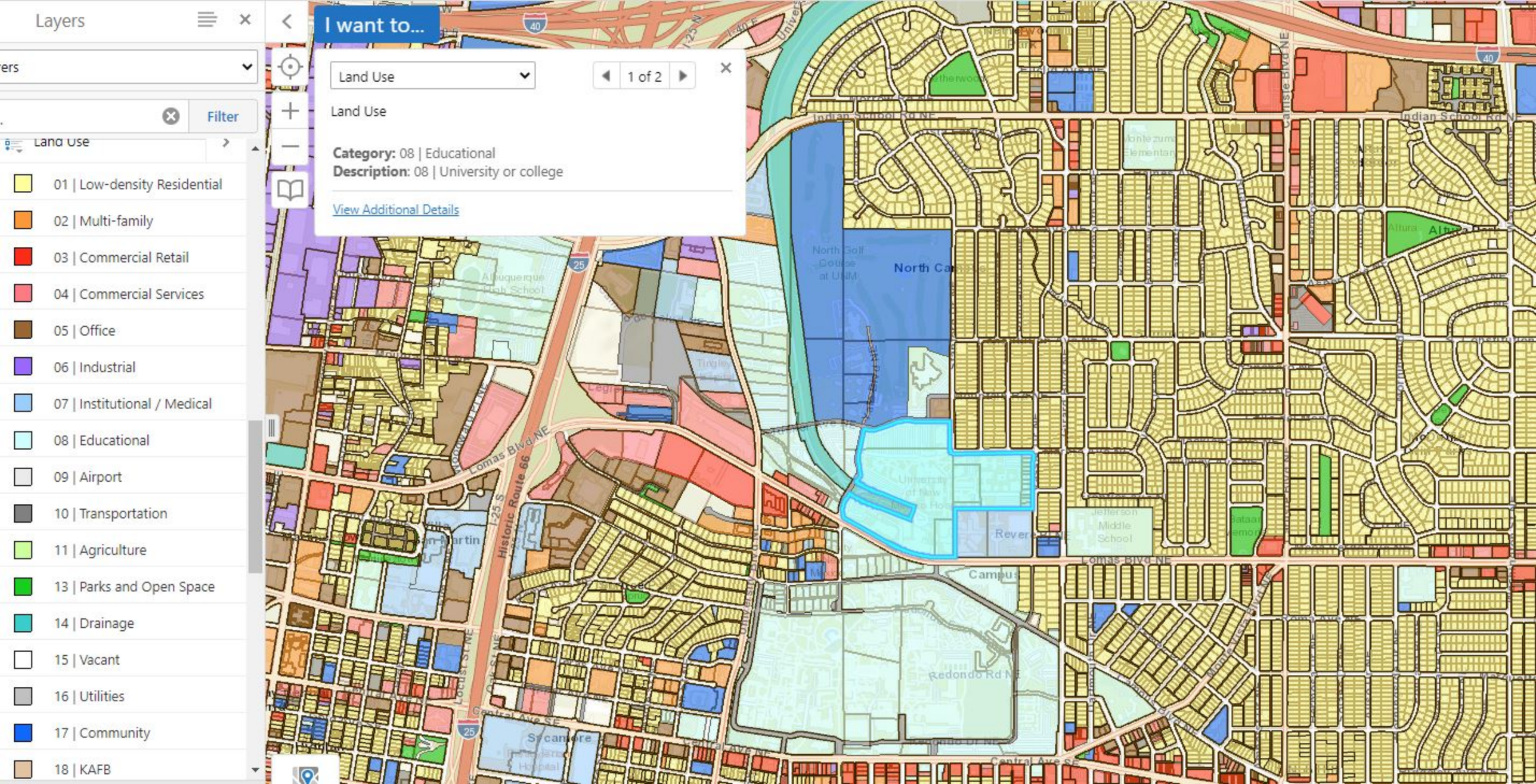
Layers
Filter
Land Use
01 | Low-density Residential
02 | Multi-family
03 | Commercial Retail
04 | Commercial Services
05 | Office
06 | Industrial
07 | Institutional / Medical
08 | Educational
09 | Airport
10 | Transportation
11 | Agriculture
13 | Parks and Open Space
14 | Drainage
15 | Vacant
16 | Utilities
17 | Community
18 | KAFB
I want to...
Land Use
1 of 2
Land Use
Category: 08 | Educational
Description: 08 | University or college
View Additional Details
Indian School Rd NE
Lomas Blvd NE
Central Ave SE
Historic Route 66
Redondo Rd NE
Campus
Jefferson Middle School
Sycamore
Altura

Buildings

Write a description for your map.

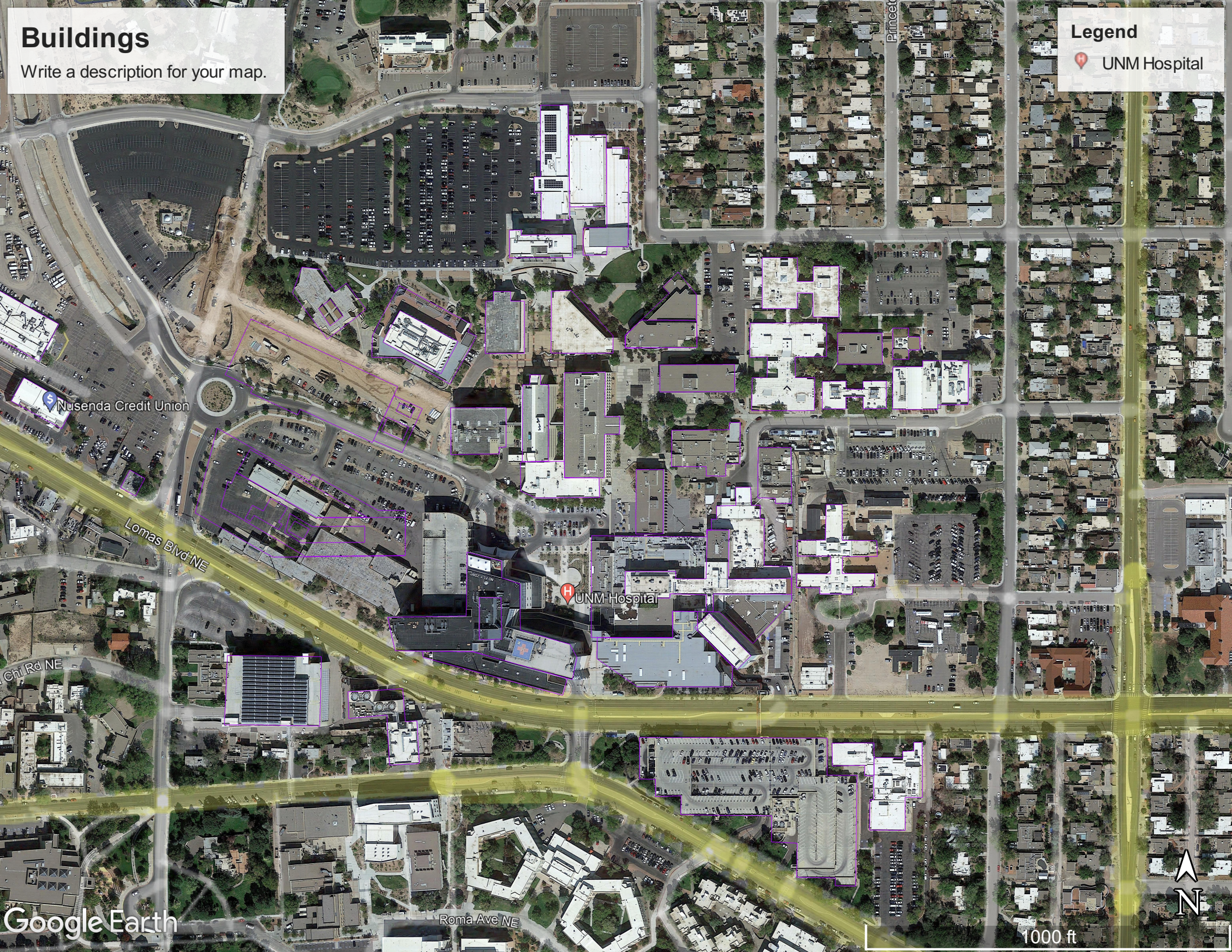

All Sources
Legend
Restricted Access
UNM Hospital
87131
CT-3
CT-1
CT-2
EG-8A
EG-9A
BLR-3A
BLR-5A
BLR-6A
EG-1A
EG-2A
EG-3A
EG-4A
EG-5A
CT-4_1
CT-6_1
CT-6_2
BLR_3B
BLR_1A
UNM Hospital
EG-10A
Google Earth
500 ft
N

CUP Sources

Write a description for your map.

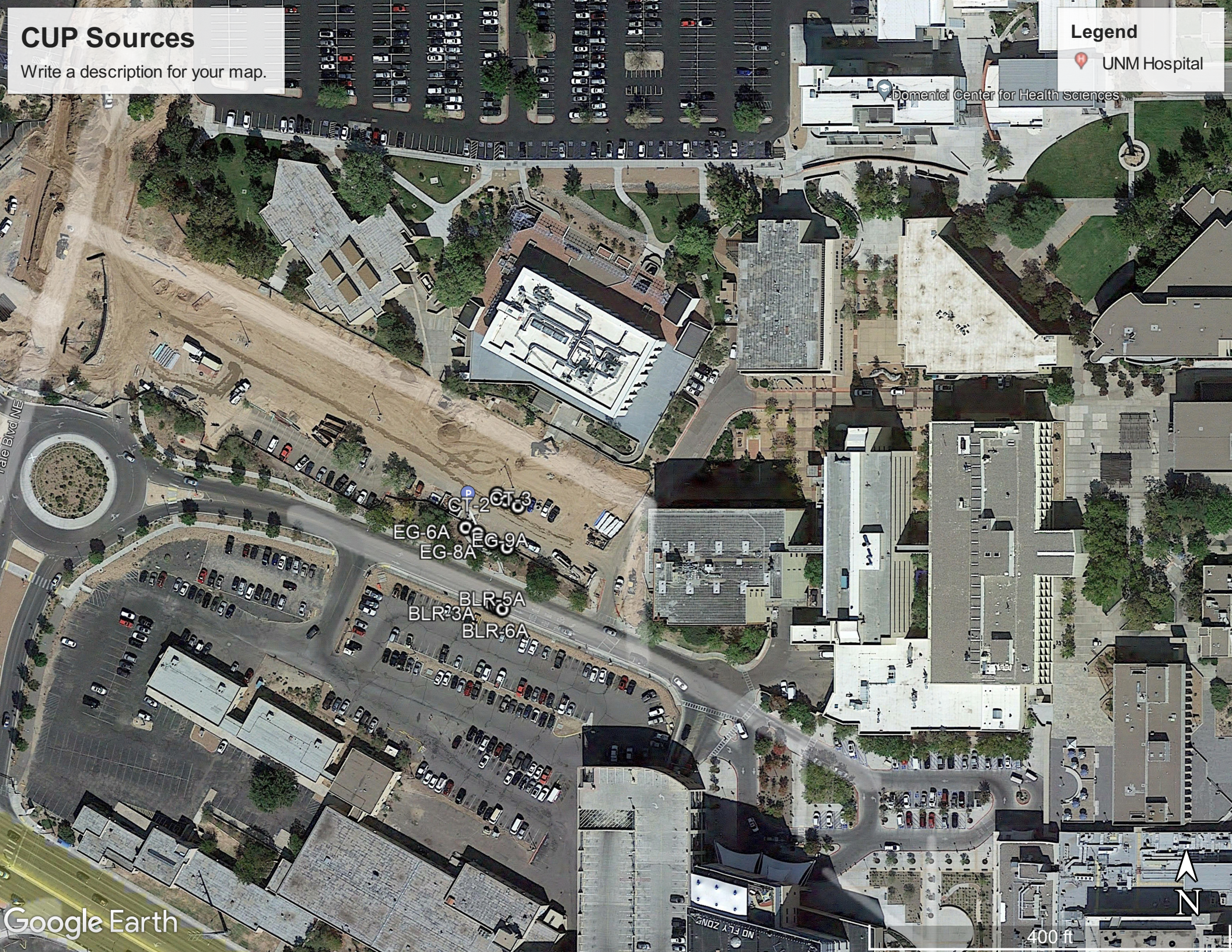

Current Hospital Sources

Write a description for your map.

3. MODELING REQUIREMENTS DESCRIPTION

a) List of Pollutants Requiring Modeling

This modeling is for a permit modification that will authorize the addition of point sources (boilers and cooling towers). As such, averaging periods will be evaluated for CO, NO_2, PM_{10}, $PM_{2.5}$, and SO_2 . This facility will not be a source of Pb; no modeling is required for this pollutant.

Table 1. Pollutant Standards for Which Modeling Waivers Have Been Granted or That are Modeled to Demonstrate Compliance with the NAAQS/NMAAQS

Pollutant	Standard	Waiver Granted	Modeled
CO	8-hr		☑
	1-hr		☑
NO_2	Annual		☑
	24-hr*		☑
	1-hr		☑
PM_{10}	24-hr		☑
$PM_{2.5}$	Annual		☑
	24-hr		☑
SO_2	Annual		☑
	24-hr*		☑
	3-hr*		☑
	1-hr		☑
H_2S	1-hr	N/A	
Pb	Quarterly	N/A	

*Note: Demonstration of compliance with a certain standard can be a surrogate that demonstrates compliance with other standards/averaging periods (e.g. 1-hr NO_2 for 24-hr NO_2; 1-hr SO_2 for 3-hr and 24-hr SO_2). The high first high value is always compared to the significant impact level for each averaging period.

b) Additional Modeling Required

No additional NSPS, NESHAP or PSD modeling is required as part of this modification application. The UNM Steam Plant is located in an area that is classified by the EPA as in attainment with the NAAQS for all regulated pollutants.

4. MODELING INPUTS

a) General Modeling Approach

i. Models Used and Justification

The most recent executable of AERMOD (v21112) was used to perform all air dispersion modeling. All models were run in regulatory default mode and Building Profile Input Program (BPIP) Prime was run to address building downwash associated with the structures located at this facility as well as the surrounding area.

ii. Operational Flexibility (During Normal Operation)

The new CUP boilers will operate under a N+1 redundancy system. In other words, 3 boilers will be operational continuously and the fourth boiler will act as a backup incase a boiler or component fails. If one of the three boilers were to suddenly fail, the fourth would be started up right away such that service would not be interrupted. The boilers will all be connected to the same network to provide steam to support the same hospital operations.

Based on the N+1 redundancy system, air dispersion modeling for this facility was completed assuming that only 3 CUP boilers were operated simultaneously (in addition to the existing units). A screening model was completed to determine which combination of the boilers would result in the highest modeled concentrations. Only the four new boilers were included in this model and all units were modeled with an emission rate of 1 g/s. All other modeled parameters match those used in the SIL and CIA modeling including height, temperature, velocity, and stack diameter. The results are summarized in Table 2 below and show that emissions from Boilers 3A through 5A (those closest to the flagpole receptors on the parking garage) resulted in the highest modeled concentration and therefore, those units were modeled in both the significance analysis and cumulative impact analysis (CIA). All averaging periods were modeled to ensure boilers 3A through 5A showed the highest impacts regardless of averaging period. Based on the results of the screening analysis, Unit 6A emissions are modeled as 0 lb/hr for all pollutants. However, as part of this permit modification, the same emissions are being requested for that unit as those for BLR 3A through 5A.

Table 2. Results of Boiler Screening Model

Boilers Included	1-HR ($\mu g/m^3$)	3-HR ($\mu g/m^3$)	8-HR ($\mu g/m^3$)	24-HR ($\mu g/m^3$)	ANNUAL ($\mu g/m^3$)
ALL	4326.26	3223.35	2410.85	1752.70	168.89
3-4-5	**3371.36**	**2537.72**	**1914.89**	**1368.65**	**129.29**
3-4-6	3286.90	2464.67	1852.27	1330.34	127.64
4-5-6	3114.59	2319.15	1718.46	1268.50	123.82
3-5-6	3205.92	2384.57	1781.22	1302.09	125.91

As mentioned during pre-application meetings with the EHD, the boilers (both new and existing) will only fire diesel fuel in emergency situations when firing of natural gas is not possible. Burning diesel backup fuel in the boilers at UNMH (even to prepare for emergencies) has not occurred for several years. As interlocks

will be installed on the boilers to ensure they do not fire diesel fuel except in emergency situations, the emissions used in the air dispersion modeling will be based on the combustion of natural gas.

This assumption was made in accordance with guidance provided in the EPA Memo entitled: "*Additional Clarification Regarding Application of Appendix W Modeling Guidance for the 1-hour NO_2 National Ambient Air Quality Standard*" (March, 1 2011). The memo notes the following:

"Given the implications of the probabilistic form of the 1-hour NO_2 NAAQS discussed above, we are concerned that assuming continuous operations for intermittent emissions would effectively impose an additional level of stringency beyond that intended by the level of the standard itself. As a result, we feel that it would be inappropriate to implement the 1-hour NO_2 standard in such a manner and recommend that compliance demonstrations for the 1-hour NO_2 NAAQS be based on emission scenarios that can logically be assumed to be relatively continuous or which occur frequently enough to contribute significantly to the annual distribution of daily maximum 1-hour concentrations. EPA believes that existing modeling guidelines provide sufficient discretion for reviewing authorities to exclude certain types of intermittent emissions from compliance demonstrations for the 1-hour NO_2 standard under these circumstances."

As emissions from diesel combustion in these dual-fuel boilers (both existing and new) are extremely rare, UNMH has designated their diesel-fired operation as intermittent in nature and therefore has based the compliance demonstration on the combustion of natural gas.

iii. Source Groups

All new or modified units (BLR-1A, BLR-2A, BLR-3B, BLR-3A through BLR-5A, and CT-1 through CT-6) were modeled simultaneously for SIL modeling (except 6A – see section a.ii. above regarding operational flexibility). All of these units were modeled simultaneously. The NMED's modeling guidelines note that the "source" includes only the new equipment or new emissions increases described in the current application. Equipment that replaces other equipment is part of the new equipment (Section 2.4.1 Significance Levels). BLR-1A and BLR-2A are being replaced and BLR-3A through BLR-5A and CT-1 through CT-6 are new equipment. Although there were no associated emission increases for unit BLR-3B, it was conservatively included in the SIL modeling. All existing units have additionally demonstrated compliance with all applicable standards including 1-HR NO_2 and 1-HR SO_2.

For CIA modeling, the UNMH source group includes all UNMH sources (BLR-1A, BLR-2A, BLR-3B, BLR-3A through BLR-5A, and CT-1 through CT-6) while the NAAQS or NMAAQS source group includes the addition of the surrounding sources. BLR-6A was not included as mentioned in the previous section (a.ii). The NAAQS source group also includes the addition of the 1-hr temporally varying background NO_2 concentration for the 1-hr NO_2 cumulative impact model. All other background concentrations were added afterwards. Additional details are provided in Section vii.

iv. Hourly Emission Factors

No hourly emission factors were used as part of the air dispersion modeling. All lb/hr values were modeled as the same for each hour of the day.

v. Gravitational Settling/Plume Depletion

Wet and dry depletion were not used to model ambient impacts of PM_{10} and $PM_{2.5}$.

vi. Reduction of NO_X to NO_2

Originally, the Tier 2, Ambient Ratio Method 2 (ARM2) was proposed to model ambient impacts of NO_2. The national default minimum ambient ratio of 0.5 and maximum ambient ratio of 0.9 was proposed. However, after initial modeling results, Tier III methods were ultimately utilized in the air dispersion modeling. As the facility is located north of Central Avenue, the Del Norte Ozone data (as provided on the EHD's website) was utilized in conjunction with the Ozone Limiting Method (OLM). This method bases NO to NO_2 conversion on the total amount of ozone (O_3) present in the atmosphere. OLM assumes that either O_3 or available NO_X is the limiting factor in the reaction of NO with O_3 to form NO_2. Using this Tier III method allows for individual sources to be assigned specialized in-stack ratios (ISR). The ratios applied to surrounding sources in the NO_2 modeling follow the table below as detailed in an email received from the EHD (dated 3/8/2021).

Table 3. Department-Approved In-Stack Ratios (ISR)

Sources	In-stack ratio value accepted by the AQP
Diesel-fired RICE engines	0.15
Natural-gas fired boilers	0.2
Other sources at facility seeking permit	0.5
Other sources 1-3 km from fence of facility seeking permit	0.2
Other sources < 1 km from fence of facility seeking permit	0.3

vii. Background Concentrations

The below background concentrations have been added to the calculated facility and neighboring source impacts for each pollutant and averaging period. These background concentrations were provided by the AQP via email on 11/5/2021 and have been preserved as provided.

Table 4. Background Concentrations

Pollutant	Standard	Value (µg/m³)	Location
NO_2	1-hr	VARIES*	Temporally Varying Data
NO_2	Annual	19	Del Norte
PM_{10}	24-hr	42	South Valley
$PM_{2.5}$	24-hr	22	South Valley
$PM_{2.5}$	Annual	8.4	South Valley

A temporally varying 1-hr NO_2 background concentration was provided by the EHD on 3/2/2021. The data was taken from the Del Norte monitor – which is the only EPA-approved monitor with checked data for a long enough period to calculate background values. This background file was added to AERMOD and used in lieu of the static background value of 84.6 µg/m^3 from the Del Norte Monitor. The table is included below – all values are in units of µg/m^3.

Table 5. Temporally Varying 1-hr NO_2 Background Data (µg/m^3)

Hour	Winter	Spring	Summer	Fall
1	72.1	47.6	29.3	65.6
2	67.8	48.3	27.7	59.7
3	67.7	46	26.4	57.9
4	68.4	48.9	26.6	58.9
5	69.1	51.7	32.7	58
6	69.7	63.9	39.3	57.8
7	72.8	70.7	46.4	63.5
8	77.6	71.8	48.5	64.5
9	80	61.1	34.2	65.9
10	71.4	48	27.3	55
11	62	28.6	24.3	47.3
12	48.1	18.9	19.9	35.4
13	36.9	17.6	17	28.2
14	35.1	15.7	15.9	25.3
15	33.6	14.8	17.4	24.2
16	37.2	15.3	19.4	28
17	48.4	17.1	20.4	38
18	73	19.4	19.3	69.6
19	79.3	38.5	21.7	79.1
20	78.1	53.2	30.9	77.1
21	77.3	48	34.1	73.4
22	76.5	56.3	30.8	70.4
23	75	58.8	34.9	69.7
24	72.4	57.9	33.6	70.9

viii. Demonstration of Compliance in Nearby Facilities

Discrete receptors were included in all surrounding sources and facilities. The facility is open to the public so there is no defined fence line which designates a property boundary. Receptors were deleted inside building boundaries except in cases where the general public has access to ambient air. In these cases, flagpole receptors were included at every level of the parking garages and elevated walkways or areas. The area surrounding the existing boilers and cooling towers is restricted via fencing and boundary receptors were included to designate this area. Any receptors in this area (shown in red) were also deleted – see Figure 1 below.

Figure 1: Area with Restricted Access Near Existing Boilers and Cooling Towers

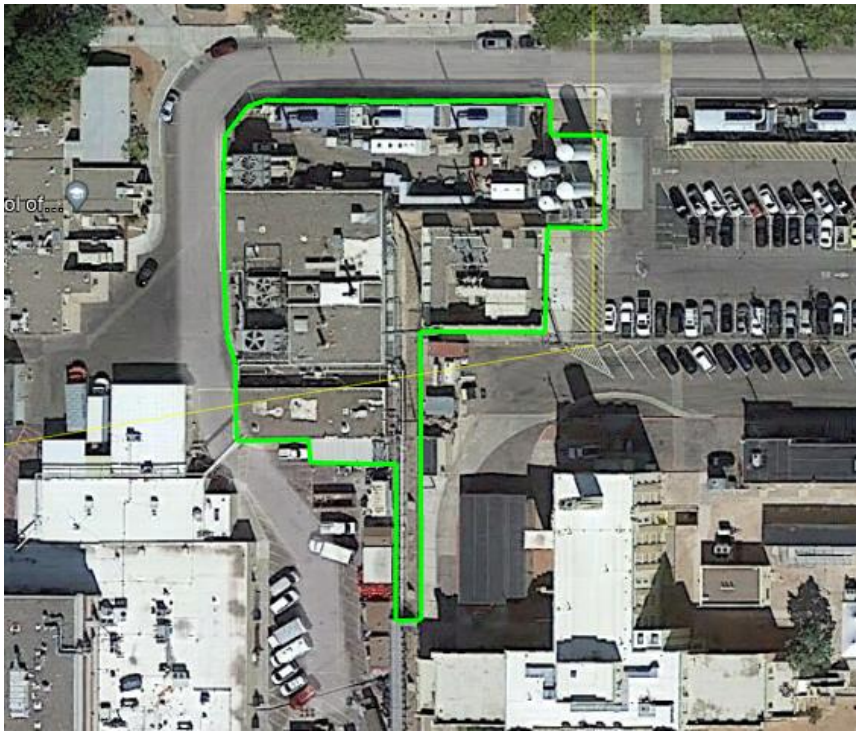

b) Meteorological and Ozone Data

i. Discussion of Meteorological and Ozone Data

The most recent meteorological data from the Albuquerque Airport from 2014 to 2018 provided by the CABQ was used for the air dispersion modeling. The airport is located nearby and this meteorological data is assumed to be adequately representative of conditions at UNMH.

As mentioned in Section vi, the Ozone data set taken primarily from the Del Norte monitor was used for NO_2 modeling. This data is assumed to be adequately representative as the facility is north of Central Avenue.

ii. Actual Data

No further justification is included as both the meteorological data and ozone data were processed and provided by the EHD and downloaded from their website.

c) Receptor and Terrain Discussion

i. Spacing of Receptor Grids

The original spacing proposed in the approved modeling protocol is included below:

- Fence line/building spacing: 25 meters;
- Very fine grid spacing: 25 meters within UNMH property;

- Fine grid spacing: 100 meters from UNMH property boundary out to 1500 meters;
- Coarse grid spacing: 250 meters out to 2500 meters from the UNMH property boundary, then 500 meters out to 5000 meters from the UNMH property boundary, and finally 1000 meters out to the edge of the modeling domain.
- Note: UNMH proposes to include flagpole receptors on any elevated areas that the public may have access to. These include elevated pedestrian walkways, and each level of nearby parking garages.

However, this spacing was changed to be more conservative by extending the fine grid spacing out further from the sources. The final spacing is described below:

- Fence line/building spacing: 25 meters;
- Very fine grid spacing: 25 meters within UNMH property;
- Fine grid spacing: 50 meters from UNMH property boundary out to 1000 meters;
- Coarse grid spacing: 100 meters out to 2500 meters from the UNMH property boundary, then 500 meters out to 5000 meters from the UNMH property boundary, and finally 1000 meters out to the edge of the modeling domain.
- Note: Flagpole receptors are spaced 25 meters apart on all parking garages and elevated surfaces. This includes every level of the existing parking structure south of Lomas Blvd next to the UNM Steam Plant; the elevated walkway from that structure to the hospital; every level of the proposed parking structure (associated with the CUP); and outside on the elevated children's play area.

ii. Terrain Discussion

Based on the most recent guidance from the EHD, USGS National Elevation Dataset (NED) files were used in lieu of Digital Elevation Model (DEM) data. 1 arc-second NED files were downloaded from the USGS National Map website in GeoTIFF format. These files were then imported into AERMAP to determine elevations for sources, receptors, and buildings:

There is no complex terrain requiring modifications to air dispersion modeling inputs.

iii. Reduction in Receptor Grid Size

The full receptor grid was utilized for all SIL models. Receptors not exceeding significance thresholds per Table 6-A of the NMED Air Dispersion Modeling Guidelines were removed for all CIA modeling.

d) Emission Sources

i. Description of Sources at Facility

1. *Choice of Source Type*

Table 6. Point Source Stack Parameters

Unit	Description	New, Existing or Modified?	Height (ft)	Temperature (°F)	Velocity (ft/s)	Diameter (ft)	Stack Orientation
BLR_1A	Boiler	Modified	40.90	330.0	25.44	2.50	Vertical
BLR_2A	Boiler	Modified	40.90	330.0	25.44	2.50	Vertical
BLR_3B	Boiler	Existing	40.90	330.0	48.75	2.00	Vertical
BLR_3A	Boiler	New	69.00	240.0	122.16	0.85	Vertical
BLR_4A	Boiler	New	69.00	240.0	122.16	0.85	Vertical
BLR_5A	Boiler	New	69.00	240.0	122.16	0.85	Vertical
BLR_6A	Boiler	New	69.00	240.0	122.16	0.85	Vertical
CT_1	Cooling Tower	New	81.02	Ambient	42.04	11.00	Vertical
CT_2	Cooling Tower	New	81.02	Ambient	42.04	11.00	Vertical
CT_3	Cooling Tower	New	81.02	Ambient	42.04	11.00	Vertical
CT_4_1	Cooling Tower	New	26.08	Ambient	43.51	7.58	Vertical
CT_4_2	Cooling Tower	New	26.08	Ambient	43.51	7.58	Vertical
CT_5	Cooling Tower	New	36.83	Ambient	45.04	11.00	Vertical
CT_6_1	Cooling Tower	New	24.58	Ambient	43.51	7.58	Vertical
CT_6_2	Cooling Tower	New	24.58	Ambient	43.51	7.58	Vertical

* Cooling towers 4 and 6 (CT-4 and CT-6) have two exhaust fans associated with them. As such, the emissions are divided equally between these two fans. The modeled parameters are identical for each fan based on data provided by the manufacturer and UNMH.

2. *Treatment of Operating Hours*

All hours of operation were modeled as part of this permit modification. Maximum hourly emission rates were used to model all standards. No reductions were claimed to represent non-continuous annual operation.

3. *Particle Size Characteristics*

No particle size distribution characteristics were included in the PM modeling.

4. *Discrepancies Between Modeled Parameters and those in the Applications*

Modeled parameters and those represented in the application are identical.

5. *Flare Calculations*

There are no flares at this facility.

6. *Cross-Reference of Model Input Numbers/Names*

All unit names in the model are identical to unit names reported in this application.

e) Building Downwash

i. Dimensions of Buildings and Tanks

Table 7. Building Dimensions and Locations Discussion of Included Buildings

ID	Description	X Coordinate (m)	Y Coordinate (m)	Elevation (m)	Height (ft)
NEW_1_1	New_1_1 - 73 ft	352220.16	3884278.78	1565.00	22.2504
NEW_1_2	New_1_2 - 46 ft	352340.06	3884212.28	1565.78	14.021
NEW_1_3	New_1_3 - 56 ft	352334.36	3884194.28	1564.53	17.069
NEW_1_4	New_1_4 - 79 ft	352183.5	3884184.2	1560.61	21.031
NEW_2_1	New_2_1 - 69 ft	352183.5	3884184.2	1560.61	68.99934
NEW_2_2	New_2_2 - 91 ft	352210.8	3884166	1560.73	91.00066
NEW_2_3	New_2_3 - 123 ft	352198.8	3884146.6	1560.09	122.9987
NEW_2_4	New_2_4 - 133 ft	352227.6	3884124.5	1560.2	132.9987
NEW_2_5	New_2_5 - 149 ft	352244	3884111.3	1560.33	148.9993
NEW_2_6	New_2_6 - 158 ft	352247.9	3884105	1560.36	157.9987
BLD_1_1	BLD_1_1 - 37 ft	352259.4	3884317.6	1568.37	37.00131
BLD_1_2	BLD_1_2 - 42 ft	352282.6	3884290.4	1568.21	42.00131
BLD_2_1	BLD_2_1 - 23 ft	352316.9	3884259.3	1568.11	22.99869
BLD_2_2	BLD_2_2 - 55 ft	352341.4	3884279.8	1569.02	55
BLD_3_1	BLD_3_1 - 58 ft	352413.7	3884286.4	1570.55	57.99869
BLD_4_1	BLD_4_1	352382	3884198	1565.7	72.99869
BLD_253	BLD_253 - 70 ft (60 ft)	352443.1	3884216.3	1568.57	60
BLD_211B	BLD_211B - 67 ft (60 ft)	352478.6	3884225.8	1569.91	60
BLD_211C	BLD_211C - 40 ft	352444.1	3884151.8	1565.61	40
BLD_5_1	BLD_5_1 - 115 ft	352325.6	3884022.6	1564.56	115
BLD_5_2	BLD_5_2 - 130 ft	352403.7	3884038.1	1562.93	130
BLD_5_4	BLD_5_4 - 28 ft	352354.9	3883993.9	1566.04	27.99869
BLD_6_1	BLD_6_1 - 40 ft	352499.1	3884088.8	1565.59	40
BLD_6_2	BLD_6_2 - 75 ft	352502.6	3884003.1	1563.31	75
BLD_6_3	BLD_6_3 - 80 ft	352527.1	3884058.6	1566.29	80
BLD_6_4	BLD_6_4 - 107 ft	352597	3884022.3	1568.37	107.0013
B265	265 - 35 ft (30 ft)	352537.6	3884143.5	1568.75	35
B201	201 - 15 ft (13 ft)	352568.1	3884176	1570.61	15
MENTALB	MENTALB - 20 ft (18.5 ft)	352640.2	3884160.2	1574.26	20
INDIANA	INDIANA (44 ft)	352696.1	3884111.7	1575.01	43.99934
B205	205 - (24 ft)	352753.7	3884225.6	1576.85	23.99934
B226	226- (40 ft)	352694.5	3884214.4	1575.89	40
B211A	211A - (21 ft)	352634.9	3884264.1	1574.8	21.00066
B228	228 - 45 ft (50 ft)	352558.9	3884230.6	1571.8	50
B266_1_1	266_1_1 - 34 ft	352530.1	3884255.8	1573.21	33.99934
B266_1_2	266_1_1 - 48 ft	352530.4	3884255.5	1573.19	47.99869
B234	234 - 63 ft (48 ft)	352468.7	3884294.2	1572.72	62.99869
B212B	212B - 24 ft	352646	3884318.5	1575.68	23.99934
B213B	213B - 12 ft	352707.9	3884254.5	1576.38	12.00131
B213A	213A - 12 ft	352754.1	3884257.9	1576.96	12.00131
MINDB	MINDB - 55 ft (36 ft)	352434.4	3884345.1	1572.9	55
MINDA	MINDA - 27 ft	352517.1	3884412.1	1574.1	27.00131
MINDC	MINDC - 43 ft	352485.9	3884423.6	1573.78	42.99869
MINDD	MINDD - 60 ft	352462.3	3884449.3	1573.6	60
BLD_7	BLD_7 - 28 ft	352108.3	3884150.1	1559.64	27.99869
BLD_8	BLD_8 - 34 ft	352018.6	3884229.8	1558.03	33.99934

BLD_9	BLD_9 - 24 ft	351974.2	3884318.3	1559.34	23.99934
BLD_10	BLD_10 - 58 ft	352189.7	3883992.9	1564.86	57.99869
BLD_11	BLD_11 - 47 ft	352291.6	3883961	1567.68	47.00131
B172	172 - 43 ft	352536.9	3883918.9	1567.32	42.99869
B153A	153A - 27 ft	352698.5	3883912.1	1570.6	27.00131
B153B	153B - 25 ft	352733.4	3883899.6	1571.23	25
BLD_253B	BLD_253_B - 40 ft	352429.6	3884157.9	1565.21	40
BLD_5_5R	BLD_5_5R - 97 ft	352393.8	3884077	1560.97	97.00131
BLD_5_6R	BLD_5_6R - 44 ft	352431.1	3884069.3	1562.12	43.99934
BLD_5_7R	BLD_5_7R - 44 ft	352437.5	3884025	1563.4	43.99934

All buildings were included in the air dispersion modeling as shown in Section 2(d). All UNMH buildings were included as well as the required buildings from surrounding areas that were requested to be included by the EHD.

5. MODELING FILES DESCRIPTION

a) List of Files

Table 8. Modeling Files and Description

Name	Description
UNMH_BLR_SCREEN	Boiler Screening Model
UNMH_NOX_SIL	NO_2 Significance Analysis
UNMH_CO_SIL	CO Significance Analysis
UNMH_SO2_SIL	SO_2 Significance Analysis
UNMH_PM10_SIL	PM_{10} Significance Analysis
UNMH_PM25_SIL	$PM_{2.5}$ Significance Analysis
UNMH_NOX_CIA_1HR	NO_2 Cumulative Impact Analysis for 1-hr Standard
UNMH_NOX_CIA_ANNUAL	NO_2 Cumulative Impact Analysis for Annual Standard
UNMH_SO2_CIA_1HR	SO_2 Cumulative Impact Analysis for 1-hr Standard
UNMH_PM10_CIA_24HR	PM_{10} Cumulative Impact Analysis for 24-hr Standard
UNMH_PM25_CIA_24HR	$PM_{2.5}$ Cumulative Impact Analysis for 24-hr Standard
UNMH_PM25_CIA_ANNUAL	$PM_{2.5}$ Cumulative Impact Analysis for Annual Standard

b) Description of Scenarios

All files labeled "SIL" represent the Significance Impact Level analysis. Modeled concentrations were above the SIL for NO_2, SO_2, $PM_{2.5}$ and PM_{10} while modeled concentrations were below the SIL for CO. As such, cumulative modeling was completed. Files labeled "CIA" represent the Cumulative Impact Analysis. Both background concentrations and surrounding sources were added into the cumulative modeling as required by the AQP.

a) Maximum Daily Contribution Analysis (MAXDCONT)

The maximum daily contribution (MAXDCONT) option in AERMOD allows users to create an output file which provides source contributions for the 24-hr $PM_{2.5}$, 1-hr NO_2 and 1-hr SO_2 standards in which the design value is based on averages of ranked values across multiple years. The user is able to define the ranks and an optimal minimum threshold concentration value. A MAXDCONT analysis was completed for the 1-hr NO_2 standard at this facility. A rank of 50 was chosen and the threshold set was 188.03 μg/m^3 (the 1-hr NAAQS for NO_2). The provided MAXDCONT file shows that the facility's contribution never exceeds the 1-hr NO_2 significance level of 7.52 μg/m^3 each time there is an exceedance of the NAAQS. In other words, the facility is not a significant contributor at any of the receptors which show exceedances of the 1-hr standard. This culpability analysis validates that the facility is not responsible for any exceedances of the 1-hr standard and demonstrates that the facility is in compliance with the applicable standard. An excerpt of the MAXDCONT results is included on the following page. The selected pages show the maximum contribution from UNMH (starting with the highest value) vs. the total contribution from the facility and surrounding sources (NAAQS). The full analysis is included as an Excel file with the modeling file submittal.

MAXDCONT ANALYSIS - CONTRIBUTION FROM UNMH BELOW SIL (7.52 ug/m3) FOR EACH EXCEEDANCE OF NAAQS - 1HR NO2

AERMOD AERMET MODELING MAXDCONT 5 FOR WITH	(21112 (OPTIONS FILE YEARS A CONTRIBUTIONS	): 19191): USED: OF FOR TOTAL FROM	UNMH 22:29:19 RegDFAULT 8TH-HIGHEST SOURCE OF OTHER	- CONC MAX GROUP: 3220 SOURCE	2014-2018 ELEV DAILY NAAQS RECEPTORS GROUPS	7/21/2022 FLGPOL 1-HR ABOVE AND PAIRED	NODRYDPLT VALUES THRESH 3 IN	NOWETDPLT AVERAGED = SOURCE TIME	OLM OVER 188.03 GROUPS &	RURAL SPACE	ADJ_U*
X	Y	AVG CONC	ZELEV	ZHILL	ZFLAG	AVE	GRP	RANK	ALL	UNMH	NAAQS
352300	3882450	191.50829	1573.29	1573.29	0	1-HR	NAAQS	10TH	122.12829	0.00704	191.50829
352300	3882450	192.87715	1573.29	1573.29	0	1-HR	NAAQS	9TH	138.67715	0.00648	192.87715
352300	3882450	189.7279	1573.29	1573.29	0	1-HR	NAAQS	12TH	134.5879	0.00646	189.7279
352300	3882450	193.4323	1573.29	1573.29	0	1-HR	NAAQS	8TH	124.4923	0.00632	193.4323
352200	3882550	193.62025	1573.9	1573.9	0	1-HR	NAAQS	17TH	127.10025	0.00631	193.62025
352300	3882450	190.37702	1573.29	1573.29	0	1-HR	NAAQS	11TH	121.79702	0.00622	190.37702
352200	3882450	202.53175	1572.92	1572.92	0	1-HR	NAAQS	17TH	144.15175	0.00609	202.53175
352200	3882450	192.5055	1572.92	1572.92	0	1-HR	NAAQS	26TH	140.2855	0.00598	192.5055
352300	3882450	188.56834	1573.29	1573.29	0	1-HR	NAAQS	13TH	128.50834	0.00575	188.56834
352200	3882650	193.83566	1574.51	1574.51	0	1-HR	NAAQS	10TH	121.41566	0.0057	193.83566
352100	3882650	188.98153	1574.21	1574.21	0	1-HR	NAAQS	14TH	133.30153	0.00555	188.98153
352200	3882450	191.04824	1572.92	1572.92	0	1-HR	NAAQS	27TH	130.70824	0.0054	191.04824
351900	3882650	193.49271	1571.8	1571.8	0	1-HR	NAAQS	10TH	126.91271	0.00533	193.49271
352200	3882650	191.56298	1574.51	1574.51	0	1-HR	NAAQS	12TH	119.36298	0.00532	191.56298
352200	3882550	191.05088	1573.9	1573.9	0	1-HR	NAAQS	19TH	126.95088	0.00531	191.05088
352000	3882650	189.99904	1573.64	1573.64	0	1-HR	NAAQS	15TH	123.39904	0.00531	189.99904
351900	3882650	191.86184	1571.8	1571.8	0	1-HR	NAAQS	12TH	120.92184	0.00529	191.86184
352200	3882450	189.75923	1572.92	1572.92	0	1-HR	NAAQS	29TH	122.23923	0.00527	189.75923
351900	3882650	188.04508	1571.8	1571.8	0	1-HR	NAAQS	17TH	118.26508	0.00513	188.04508
352000	3882550	194.83125	1573.56	1573.56	0	1-HR	NAAQS	31ST	145.07125	0.00505	194.83125
352200	3882450	194.01729	1572.92	1572.92	0	1-HR	NAAQS	25TH	145.67729	0.00505	194.01729
352200	3882450	189.05581	1572.92	1572.92	0	1-HR	NAAQS	30TH	135.31581	0.00505	189.05581
351900	3882650	188.75274	1571.8	1571.8	0	1-HR	NAAQS	16TH	121.69274	0.005	188.75274
352200	3882450	188.04101	1572.92	1572.92	0	1-HR	NAAQS	32ND	138.58101	0.005	188.04101
352200	3882650	194.59867	1574.51	1574.51	0	1-HR	NAAQS	9TH	127.01867	0.00499	194.59867
352200	3882550	191.90592	1573.9	1573.9	0	1-HR	NAAQS	18TH	130.60592	0.00497	191.90592
352200	3882650	195.44583	1574.51	1574.51	0	1-HR	NAAQS	8TH	135.48583	0.00496	195.44583
352000	3882650	194.57034	1573.64	1573.64	0	1-HR	NAAQS	8TH	124.53034	0.00496	194.57034
352200	3882650	192.81433	1574.51	1574.51	0	1-HR	NAAQS	11TH	127.43433	0.00496	192.81433
352000	3882650	191.24013	1573.64	1573.64	0	1-HR	NAAQS	13TH	136.60013	0.00492	191.24013
351800	3882550	189.42692	1569.76	1569.76	0	1-HR	NAAQS	20TH	115.50692	0.00492	189.42692
351900	3882650	195.42134	1571.8	1571.8	0	1-HR	NAAQS	8TH	127.66134	0.00491	195.42134
352000	3882650	193.89687	1573.64	1573.64	0	1-HR	NAAQS	9TH	146.55687	0.00486	193.89687

352100	3882650	189.90238	1574.21	1574.21	0	1-HR	NAAQS	13TH	121.10238	0.00482	189.90238
352200	3882450	196.83926	1572.92	1572.92	0	1-HR	NAAQS	22ND	141.05926	0.00481	196.83926
352200	3882650	188.5563	1574.51	1574.51	0	1-HR	NAAQS	15TH	119.1963	0.00481	188.5563
351800	3882550	192.35057	1569.76	1569.76	0	1-HR	NAAQS	13TH	123.03057	0.00478	192.35057
352100	3882550	190.34968	1573.87	1573.87	0	1-HR	NAAQS	35TH	129.76968	0.00477	190.34968
352200	3882450	194.63244	1572.92	1572.92	0	1-HR	NAAQS	24TH	128.01244	0.00476	194.63244
352300	3882350	190.40654	1573.55	1573.55	0	1-HR	NAAQS	23RD	137.56654	0.00475	190.40654
352100	3882650	191.7003	1574.21	1574.21	0	1-HR	NAAQS	10TH	125.9603	0.00471	191.7003
351800	3882550	189.00605	1569.76	1569.76	0	1-HR	NAAQS	21ST	115.28605	0.00471	189.00605
352000	3882650	188.57859	1573.64	1573.64	0	1-HR	NAAQS	18TH	124.07859	0.00471	188.57859
351800	3882550	195.72487	1569.76	1569.76	0	1-HR	NAAQS	8TH	130.26487	0.0047	195.72487
351800	3882550	190.53459	1569.76	1569.76	0	1-HR	NAAQS	16TH	123.63459	0.0047	190.53459
351900	3882550	188.87102	1571.52	1571.52	0	1-HR	NAAQS	36TH	128.63102	0.00469	188.87102
352000	3882650	193.24581	1573.64	1573.64	0	1-HR	NAAQS	10TH	121.88581	0.00467	193.24581
352200	3882650	189.14309	1574.51	1574.51	0	1-HR	NAAQS	14TH	129.22309	0.00467	189.14309
351900	3882650	194.78607	1571.8	1571.8	0	1-HR	NAAQS	9TH	126.96607	0.00465	194.78607
351800	3882550	190.36589	1569.76	1569.76	0	1-HR	NAAQS	17TH	116.00589	0.00464	190.36589
352200	3882550	203.90259	1573.9	1573.9	0	1-HR	NAAQS	10TH	133.66259	0.00463	203.90259
351900	3882650	193.11085	1571.8	1571.8	0	1-HR	NAAQS	11TH	119.23085	0.00462	193.11085
352100	3882650	192.49889	1574.21	1574.21	0	1-HR	NAAQS	9TH	127.45889	0.00461	192.49889
352100	3882550	191.28076	1573.87	1573.87	0	1-HR	NAAQS	33RD	123.36076	0.0046	191.28076
352100	3882650	193.17316	1574.21	1574.21	0	1-HR	NAAQS	8TH	126.01316	0.00459	193.17316
352200	3882450	190.65651	1572.92	1572.92	0	1-HR	NAAQS	28TH	137.83651	0.00458	190.65651
352300	3882350	206.27837	1573.55	1573.55	0	1-HR	NAAQS	12TH	143.05837	0.00457	206.27837
352100	3882650	190.83277	1574.21	1574.21	0	1-HR	NAAQS	12TH	117.05277	0.00457	190.83277
352200	3882450	213.58693	1572.92	1572.92	0	1-HR	NAAQS	10TH	150.56693	0.00454	213.58693
352100	3882550	198.16146	1573.87	1573.87	0	1-HR	NAAQS	23RD	131.90146	0.00454	198.16146
352200	3882450	215.67122	1572.92	1572.92	0	1-HR	NAAQS	9TH	157.57122	0.00453	215.67122
352200	3882550	199.1735	1573.9	1573.9	0	1-HR	NAAQS	13TH	135.0335	0.00451	199.1735
351800	3882450	194.45694	1571.91	1571.91	0	1-HR	NAAQS	26TH	122.97694	0.00451	194.45694
351900	3882650	189.52456	1571.8	1571.8	0	1-HR	NAAQS	15TH	117.06456	0.0045	189.52456
351900	3882550	188.23625	1571.52	1571.52	0	1-HR	NAAQS	37TH	126.35625	0.0045	188.23625
351900	3882550	194.81526	1571.52	1571.52	0	1-HR	NAAQS	26TH	135.75526	0.00449	194.81526
352200	3882450	201.18252	1572.92	1572.92	0	1-HR	NAAQS	18TH	145.16252	0.00447	201.18252
351800	3882550	191.02151	1569.76	1569.76	0	1-HR	NAAQS	15TH	118.36151	0.00447	191.02151
351900	3882650	190.1235	1571.8	1571.8	0	1-HR	NAAQS	14TH	115.3635	0.00447	190.1235
351900	3882450	189.99833	1572.06	1572.06	0	1-HR	NAAQS	43RD	121.27833	0.00447	189.99833
352200	3882450	196.29482	1572.92	1572.92	0	1-HR	NAAQS	23RD	139.21482	0.00446	196.29482
351900	3882650	191.16645	1571.8	1571.8	0	1-HR	NAAQS	13TH	124.32645	0.00446	191.16645
351800	3882550	189.9493	1569.76	1569.76	0	1-HR	NAAQS	18TH	118.4093	0.00444	189.9493
352000	3882650	189.24608	1573.64	1573.64	0	1-HR	NAAQS	17TH	122.48608	0.00443	189.24608
352400	3882250	192.25877	1574.55	1574.55	0	1-HR	NAAQS	10TH	117.39877	0.00442	192.25877

352200	3882450	207.42642	1572.92	1572.92	0	1-HR	NAAQS	13TH	143.36642	0.00441	207.42642
351900	3882550	193.39365	1571.52	1571.52	0	1-HR	NAAQS	28TH	131.41365	0.0044	193.39365
351700	3882450	188.48014	1569.51	1571.83	0	1-HR	NAAQS	13TH	116.58014	0.0044	188.48014
352200	3882450	211.00354	1572.92	1572.92	0	1-HR	NAAQS	11TH	159.92354	0.00438	211.00354
352100	3882650	188.06522	1574.21	1574.21	0	1-HR	NAAQS	15TH	129.48522	0.00438	188.06522
351800	3882550	191.77949	1569.76	1569.76	0	1-HR	NAAQS	14TH	121.77949	0.00437	191.77949
352300	3882350	196.48853	1573.55	1573.55	0	1-HR	NAAQS	19TH	131.80853	0.00436	196.48853
351900	3882550	196.05192	1571.52	1571.52	0	1-HR	NAAQS	21ST	131.17192	0.00436	196.05192
351800	3882550	193.75247	1569.76	1569.76	0	1-HR	NAAQS	11TH	119.39247	0.00436	193.75247
351700	3882250	191.4355	1571.64	1571.64	0	1-HR	NAAQS	8TH	129.8755	0.00436	191.4355
352300	3882350	193.94528	1573.55	1573.55	0	1-HR	NAAQS	21ST	131.64528	0.00435	193.94528
351800	3882550	194.5838	1569.76	1569.76	0	1-HR	NAAQS	10TH	127.3838	0.00434	194.5838
352000	3882650	192.26357	1573.64	1573.64	0	1-HR	NAAQS	12TH	121.54357	0.00434	192.26357
352200	3882650	190.44178	1574.51	1574.51	0	1-HR	NAAQS	13TH	126.18178	0.00434	190.44178
352200	3882450	203.40922	1572.92	1572.92	0	1-HR	NAAQS	16TH	152.04922	0.00433	203.40922
351900	3882550	190.01206	1571.52	1571.52	0	1-HR	NAAQS	33RD	129.51206	0.00433	190.01206
352000	3882550	189.5346	1573.56	1573.56	0	1-HR	NAAQS	37TH	145.0746	0.00431	189.5346
351700	3882450	190.35879	1569.51	1571.83	0	1-HR	NAAQS	10TH	116.71879	0.0043	190.35879
352200	3882350	204.22399	1572.68	1572.68	0	1-HR	NAAQS	44TH	160.66399	0.00428	204.22399
352100	3882650	191.30732	1574.21	1574.21	0	1-HR	NAAQS	11TH	128.14732	0.00426	191.30732
351900	3882550	200.49681	1571.52	1571.52	0	1-HR	NAAQS	14TH	130.91681	0.00424	200.49681
352100	3882550	193.01514	1573.87	1573.87	0	1-HR	NAAQS	31ST	132.65514	0.00424	193.01514
351700	3882450	189.79296	1569.51	1571.83	0	1-HR	NAAQS	11TH	118.57296	0.00424	189.79296
352200	3882450	204.82518	1572.92	1572.92	0	1-HR	NAAQS	15TH	147.86518	0.00423	204.82518
352200	3882450	200.37226	1572.92	1572.92	0	1-HR	NAAQS	19TH	134.75226	0.00422	200.37226
351800	3882550	193.33243	1569.76	1569.76	0	1-HR	NAAQS	12TH	121.49243	0.00422	193.33243
352000	3882650	192.95735	1573.64	1573.64	0	1-HR	NAAQS	11TH	126.61735	0.00422	192.95735
352300	3882350	191.69001	1573.55	1573.55	0	1-HR	NAAQS	22ND	130.83001	0.00422	191.69001
352200	3882350	233.86843	1572.68	1572.68	0	1-HR	NAAQS	23RD	179.76843	0.00421	233.86843
352200	3882350	205.22032	1572.68	1572.68	0	1-HR	NAAQS	43RD	140.66032	0.00421	205.22032
352200	3882450	199.05676	1572.92	1572.92	0	1-HR	NAAQS	20TH	132.99676	0.00421	199.05676
351900	3882550	196.92072	1571.52	1571.52	0	1-HR	NAAQS	19TH	135.06072	0.0042	196.92072
351800	3882550	188.54716	1569.76	1569.76	0	1-HR	NAAQS	22ND	122.54716	0.0042	188.54716
351900	3882450	191.09823	1572.06	1572.06	0	1-HR	NAAQS	42ND	128.55823	0.00419	191.09823
352200	3882450	205.80243	1572.92	1572.92	0	1-HR	NAAQS	14TH	143.50243	0.00418	205.80243
351800	3882450	202.13596	1571.91	1571.91	0	1-HR	NAAQS	12TH	145.61596	0.00418	202.13596
351700	3882450	189.0805	1569.51	1571.83	0	1-HR	NAAQS	12TH	120.1805	0.00418	189.0805
351800	3882450	199.30311	1571.91	1571.91	0	1-HR	NAAQS	15TH	124.20311	0.00417	199.30311
352200	3882450	209.59848	1572.92	1572.92	0	1-HR	NAAQS	12TH	142.67848	0.00416	209.59848
351900	3882550	202.02653	1571.52	1571.52	0	1-HR	NAAQS	11TH	137.00653	0.00415	202.02653
352200	3882350	196.24337	1572.68	1572.68	0	1-HR	NAAQS	49TH	140.22337	0.00415	196.24337
352200	3882550	194.74735	1573.9	1573.9	0	1-HR	NAAQS	16TH	132.22735	0.00415	194.74735

6. MODELING RESULTS

a) Summary of Modeling Results

Table 9. Model Results; Maximum Concentrations; SIL Comparison

Pollutant	Averaging Period	Significance Level	Modeled	Percent of Significance	Location of Maximum Concentration		Elevation (m)
		µg/m³	µg/m³		X	Y	
CO	8-hr	500	191.85736	38.4%	352640.30	3884146.80	1574.24
CO	1-hr	2000	318.19882	15.9%	352640.30	3884146.80	1574.24
NO_2	Annual	1	5.44857	Significant	352700.00	3884025.00	1573.89
NO_2	24-hr	5	51.35818	Significant	352640.30	3884146.80	1574.24
NO_2	1-hr	7.52	135.31861	Significant	352640.30	3884146.80	1574.24
$PM_{2.5}$	Annual	0.2	0.27657	Significant	352700.00	3884025.00	1573.89
$PM_{2.5}$	24-hr	1.2	2.35246	Significant	352640.30	3884146.80	1574.24
PM_{10}	Annual	1	0.50053	50.1%	352637.70	3883956.90	1567.78
PM_{10}	24-hr	5	7.83004	Significant	352322.16	3884202.28	1564.46
SO_2	Annual	1	2.21484	Significant	352700.00	3884025.00	1573.89
SO_2	24-hr	5	22.93603	Significant	352640.30	3884146.80	1574.24
SO_2	3-hr	25	48.33063	Significant	352640.30	3884146.80	1574.24
SO_2	1-hr	7.8	54.66569	Significant	352640.30	3884146.80	1574.24

b) Table of Cumulative Concentrations

Table 10. Cumulative vs. Ambient Air Quality Standards

Pollutant	Averaging Period	Standard, µg/m³		Modeled, µg/m3		Background	Calculated	Percent of the Standard	
		NAAQS	NMAAQS	Facility	Facility & Neighbors*	µg/m³	µg/m³	NAAQS	NMAAQS
NO_2	Annual	99.66	94.0	5.91829	7.54044	19.0	26.54044	27%	28%
	1-hr	188.03	-	114.64496	MAXDCONT	<188	MAXDCONT	<100%	-
$PM_{2.5}$	24-hr	12	-	0.27657	0.27657	8.4	8.67657	72%	-
PM_{10}	24-hr	35	-	1.23284	1.23284	22.0	23.23284	66%	-
SO_2	1-hr	150	-	7.60385	7.60385	42.0	49.60385	33%	-

*Based on guidance from the EHD received in the email providing surrounding sources (dated 7/2/2021), no surrounding sources are required to be added to the PM models if South Valley background concentrations are used. As such, the PM_{10} and $PM_{2.5}$ models only include the sources from the facility plus the conservative background concentrations from the South Valley monitor.

A MAXDCONT analysis was completed for 1-HR NO_2 and included with the modeling files which shows that the contribution from the facility does not exceed the significance level at receptors which recorded exceedances of the NAAQS. The analysis shows that the facility has demonstrated compliance with the applicable standard.

7. SUMMARY AND CONCLUSIONS

a) Modeling Statement

The submitted air dispersion modeling and report demonstrate compliance with the National and New Mexico Ambient Air Quality Standards. All requirements have been satisfied. There are no exceedances which would prohibit approval of the permit modification.

APPENDIX A. APPLICATION FORMS

Application for Air Pollutant Sources in Bernalillo County Source Registration (20.11.40 NMAC) and Construction Permits (20.11.41 NMAC) – Long Form

Permit Application Checklist

Permit Application Review Fee Checklist

City of Albuquerque – Environmental Health Department
Air Quality Program
Please mail this application to **P.O. Box 1293, Albuquerque, NM 87103**
or hand deliver between 8:00 am – 5:00 pm Monday – Friday to:
3rd Floor, Suite 3023 – One Civic Plaza NW, Albuquerque, NM 87102
(505) 768-1972 aqd@cabq.gov

Application for Air Pollutant Sources in Bernalillo County
Source Registration (20.11.40 NMAC) and Construction Permits (20.11.41 NMAC)

Submittal Date: July 22, 2022

Owner/Corporate Information ☐ **Check here and leave this section blank if information is exactly the same as Facility Information below.**

Company Name: **University of New Mexico Hospitals (UNMH)**			
Mailing Address: **2211 Lomas Blvd. NE**	City: **Albuquerque**	State: **NM**	Zip: **87106**
Company Phone: **(505) 272-0021**	Company Contact: **Enrico Volpato**		
Company Contact Title: **Executive Director Facility Services**	Phone: **(505) 272-0021**	E-mail: **edvolpato@salud.unm.edu**	

Stationary Source (Facility) Information: **Provide a plot plan (legal description/drawing of the facility property) with overlay sketch of facility processes, location of emission points, pollutant type, and distances to property boundaries.**

Facility Name: **University of New Mexico Hospitals**			
Facility Physical Address: **2211 Lomas Blvd. NE**	City: **Albuquerque**	State: **NM**	Zip: **87106**
Facility Mailing Address (if different): **N/A**	City: **N/A**	State: **N/A**	Zip: **N/A**
Facility Contact: **Enrico Volpato**	Title: **Executive Director Facility Services**		
Phone: **(505) 272-0021**	E-mail: **edvolpato@salud.unm.edu**		
Authorized Representative Name[1]: **N/A**	Authorized Representative Title: **N/A**		

Billing Information ☒ **Check here if same contact and mailing address as corporate** ☐ **Check here if same as facility**

Billing Company Name:			
Mailing Address:	City:	State:	Zip:
Billing Contact:	Title:		
Phone:	E-mail:		

Preparer/Consultant(s) Information ☐ **Check here and leave section blank if no Consultant used or Preparer is same as Facility Contact.**

Name: **Michael Celente**	Title: **Senior Consultant**		
Mailing Address: **9400 Holly Ave NE, Building 3, Suite 300**	City: **Albuquerque**	State: **NM**	Zip: **87122**
Phone: **(505) 266-6611**	Email: **mcelente@trinityconsultants.com**		

1. See 20.11.41.13(E)(13) NMAC.

Application for Air Pollutant Sources in Bernalillo County
Source Registration (20.11.40 NMAC) and Construction Permits (20.11.41 NMAC)

General Operation Information (if any question does not pertain to your facility, type N/A on the line or in the box)

Permitting action being requested (please refer to the definitions in 20.11.40 NMAC or 20.11.41 NMAC):			
☐ New Permit	☒ Permit Modification Current Permit #: **0953-M4-2TR**	☐ Technical Permit Revision Current Permit #:	☐ Administrative Permit Revision Current Permit #:
☐ New Registration Certificate	☐ Modification Current Reg. #:	☐ Technical Revision Current Reg. #:	☐ Administrative Revision Current Reg. #:

UTM coordinates of facility (Zone 13, NAD 83): **13S - 352,653 m E; 3,884,148 m N**	
Facility type (*i.e.*, a description of your facility operations): **General Medical and Surgical Hospitals**	
Standard Industrial Classification (SIC Code #): **8062**	North American Industry Classification System (NAICS Code #): **622110**
Is this facility currently operating in Bernalillo County? **Yes**	If **YES**, list date of original construction: **1999** If **NO**, list date of planned startup:
Is the facility permanent? **Yes**	If **NO**, list dates for requested temporary operation: From Through
Is the facility a portable stationary source? **No**	If **YES**, is the facility address listed above the main permitted location for this source?
Is the application for a physical or operational change, expansion, or reconstruction (*e.g.*, altering process, or adding, or replacing process or control equipment, etc.) to an existing facility? **Yes**	
Provide a description of the requested changes: **Addition of four (4) dual-fuel boilers rated at 6 MMBtu/hr, four (4) diesel-fired backup generators rated at 1750 kW (2,922 hp), three (3) cooling towers rated at 6,723 gpm associated with the Central Utility Plant (CUP) and one additional emergency generator rated at 200 kW (324 hp) associated with the BBRP building. Replacement of existing boilers (BLR-1A and BLR-2A) with unit rated at 23.4 MMBtu/hr. Updates to emissions for BLR-3B. Updates to modeling parameters and calculations for BLR-1A, 2-A and 3-B based on most recent operational and manufacturer data provided by UNMH including updates to stack heights, temperatures, diameters, and exit velocities compared to current permitted values..**	
What is the facility's operation? ☒ Continuous ☐ Intermittent ☐ Batch	

Estimated percent of production/operation:	Jan-Mar: **25%**	Apr-Jun: **25%**	Jul-Sep: **25%**	Oct-Dec: **25%**
Requested operating times of facility:	**24** hours/day	**7** days/week	**4** weeks/month	**12** months/year

Will there be special or seasonal operating times other than shown above? This includes monthly- or seasonally-varying hours. **No**
If **YES**, please explain: **N/A**
List raw materials processed: **N/A**
List saleable item(s) produced: **N/A**

USE INSTRUCTIONS: For the forms on the following pages, please do not alter or delete the existing footnotes or page breaks. If additional footnotes are needed then add them to the end of the existing footnote list for a given table. Only update the rows and cells within tables as necessary for your project. Unused rows can be deleted from tables. If multiple scenarios will be represented then the Uncontrolled and Controlled Emission Tables, and other tables as needed, can be duplicated and adjusted to indicate the different scenarios.

Regulated Emission Sources Table

(*E.g.*, Generator-Crusher-Screen-Conveyor-Boiler-Mixer-Spray Guns-Saws-Sander-Oven-Dryer-Furnace-Incinerator-Haul Road-Storage Pile, etc.) Match the Units listed on this Table to the same numbered line if also listed on Emissions Tables & Stack Table.

Unit Number and Description[1]		Manufacturer	Model #	Serial #	Manufacture Date	Installation Date	Modification Date[2]	Process Rate or Capacity (Hp, kW, Btu, ft^3, lbs, tons, yd^3, etc.)[3]	Fuel Type
Existing Equipment to be Replaced									
UNMH-BLR-1A	**Dual-Fuel Boiler**	**Kewanee Classic II**	**K-401-G02**	**12828**	**5/4/98**	**1999**	**N/A**	**17.04 MMBtu/hr**	**Natural Gas and Diesel**
UNMH-BLR-2A	**Dual-Fuel Boiler**	**Kewanee Classic II**	**K-401-G02**	**11386**	**5/4/98**	**1999**	**N/A**	**17.04 MMBtu/hr**	**Natural Gas and Diesel**
Replacement Equipment									
UNMH-BLR-1A	**Dual-Fuel Boiler**	**Hurst**	**S4-GP2-700-150**	**TBD**	**TBD**	**TBD**	**N/A**	**23.43 MMBtu/hr**	**Natural Gas and Diesel**
UNMH-BLR-2A	**Dual-Fuel Boiler**	**Hurst**	**S4-GP2-700-150**	**TBD**	**TBD**	**TBD**	**N/A**	**23.43 MMBtu/hr**	**Natural Gas and Diesel**
Existing Equipment									
UNMH-BLR-3B	**Dual-Fuel Boiler**	**Cleaver Brooks**	**CB-LE 700**	**10257**	**11/10/00**	**2012**	**N/A**	**28.74 MMBtu/hr**	**Natural Gas and Diesel**
UNMH-EG-1A	**Diesel-Fired Emergency Generator**	**Caterpillar**	**3512 B**	**8RM00328**	**9/8/98**	**2000**	**N/A**	**1,820 hp**	**Diesel**
UNMH-EG-2A	**Diesel-Fired Emergency Generator**	**Caterpillar**	**3512 C**	**LYH00280**	**5/29/18**	**2019**	**N/A**	**2,206 hp**	**Diesel**
UNMH-EG-3A	**Diesel-Fired Emergency Generator**	**Caterpillar**	**3512 C**	**LYH00272**	**4/19/18**	**2019**	**N/A**	**2,206 hp**	**Diesel**
UNMH-EG-4A	**Diesel-Fired Emergency Generator**	**Caterpillar**	**3512 CDITA**	**SBG00289**	**2007**	**2009**	**N/A**	**2,500 hp**	**Diesel**
UNMH-EG-5A	**Diesel-Fired Emergency Generator**	**Caterpillar**	**3512 CDITA**	**SBG00589**	**2008**	**2009**	**N/A**	**2,500 hp**	**Diesel**
New Equipment									
UNMH-BLR-3A	**Dual-Fuel Boiler**	**Riello**	**RTC 6000**	**TBD**	**TBD**	**TBD**	**N/A**	**6.0 MMBtu/hr**	**Natural Gas and Diesel**
UNMH-BLR-4A	**Dual-Fuel Boiler**	**Riello**	**RTC 6000**	**TBD**	**TBD**	**TBD**	**N/A**	**6.0 MMBtu/hr**	**Natural Gas and Diesel**
UNMH-BLR-5A	**Dual-Fuel Boiler**	**Riello**	**RTC 6000**	**TBD**	**TBD**	**TBD**	**N/A**	**6.0 MMBtu/hr**	**Natural Gas and Diesel**
UNMH-BLR-6A	**Dual-Fuel Boiler**	**Riello**	**RTC 6000**	**TBD**	**TBD**	**TBD**	**N/A**	**6.0 MMBtu/hr**	**Natural Gas and Diesel**

Unit Number and Description[1]		Manufacturer	Model #	Serial #	Manufacture Date	Installation Date	Modification Date[2]	Process Rate or Capacity (Hp, kW, Btu, ft^3, lbs, tons, yd^3, etc.)[3]	Fuel Type
UNMH-EG-6A	**Diesel-Fired Emergency Generator**	**Cummins**	**QSK60-G6 NR2**	**TBD**	**>7/11/2005**	**TBD**	**N/A**	**2,922 hp**	**Diesel**
UNMH-EG-7A	**Diesel-Fired Emergency Generator**	**Cummins**	**QSK60-G6 NR2**	**TBD**	**>7/11/2005**	**TBD**	**N/A**	**2,922 hp**	**Diesel**
UNMH-EG-8A	**Diesel-Fired Emergency Generator**	**Cummins**	**QSK60-G6 NR2**	**TBD**	**>7/11/2005**	**TBD**	**N/A**	**2,922 hp**	**Diesel**
UNMH-EG-9A	**Diesel-Fired Emergency Generator**	**Cummins**	**QSK60-G6 NR2**	**TBD**	**>7/11/2005**	**TBD**	**N/A**	**2,922 hp**	**Diesel**
UNMH-EG-10A	**Diesel-Fired Emergency Generator**	**Cummins**	**QSB7-G5 NR3**	**TBD**	**> 7/11/2005**	**TBD**	**N/A**	**324 hp**	**Diesel**
CT-1	**Cooling Tower**	**Marley**	**NC8413U AN3**	**TBD**	**TBD**	**TBD**	**N/A**	**6,723 gpm**	**Electric**
CT-2	**Cooling Tower**	**Marley**	**NC8413U AN3**	**TBD**	**TBD**	**TBD**	**N/A**	**6,723 gpm**	**Electric**
CT-3	**Cooling Tower**	**Marley**	**NC8413U AN3**	**TBD**	**TBD**	**TBD**	**N/A**	**6,723 gpm**	**Electric**
CT-4	**Cooling Tower**	**Unknown**	**Unknown**	**TBD**	**TBD**	**TBD**	**N/A**	**2,400 gpm**	**Electric**
CT-5	**Cooling Tower**	**Unknown**	**Unknown**	**TBD**	**TBD**	**TBD**	**N/A**	**2,400 gpm**	**Electric**
CT-6	**Cooling Tower**	**Unknown**	**Unknown**	**TBD**	**TBD**	**TBD**	**N/A**	**2,400 gpm**	**Electric**

NOTE: To add extra rows in Word, click anywhere in the last row. A plus (+) sign should appear on the bottom right corner of the row. Click the plus (+) sign to add a row. Repeat as needed.

1. Unit numbers must correspond to unit numbers in the previous permit unless a complete cross reference table of all units in both permits is provided.
2. To determine whether a unit has been modified, evaluate if changes have been made to the unit that impact emissions or that trigger modification as defined in 20.11.41.7(U) NMAC. If not, put N/A.
3. Basis for Equipment Process Rate or Capacity (*e.g.*, Manufacturer's Data, Field Observation/Test, etc.) **Manufacturer Data**
   Submit information for each unit as an attachment.

Emissions Control Equipment Table

Control Equipment Units listed on this Table should either match up to the same Unit number as listed on the Regulated Emission Sources, Controlled Emissions and Stack Parameters Tables (if the control equipment is integrated with the emission unit) or should have a distinct Control Equipment Unit Number and that number should then also be listed on the Stack Parameters Table.

Control Equipment Unit Number and Description		Controlling Emissions for Unit Number(s)	Manufacturer	Model # | Serial #	Date Installed	Controlled Pollutant(s)	% Control Efficiency[1]	Method Used to Estimate Efficiency	Rated Process Rate or Capacity or Flow
N/A – There is no control equipment at this facility.									
				|					
				|					
				|					
				|					
				|					
				|					
				|					
				|					
				|					

NOTE: To add extra rows in Word, click anywhere in the last row. A plus (+) sign should appear on the bottom right corner of the row. Click the plus (+) sign to add a row. Repeat as needed.

1. Basis for Control Equipment % Efficiency (*e.g.*, Manufacturer's Data, Field Observation/Test, AP-42, etc.). _____
   Submit information for each unit as an attachment.

Exempted Sources and Exempted Activities Table

See 20.11.41 NMAC for exemptions.

Unit Number and Description		Manufacturer	Model #	Serial #	Manufacture Date	Installation Date	Modification Date[1]	Process Rate or Capacity (Hp, kW, Btu, ft^3, lbs, tons, yd^3, etc.)[2]	Fuel Type
N/A – There are no exempt activities to report.									
								/	
								/	
								/	
								/	
								/	
								/	
								/	
								/	
								/	
								/	
								/	
								/	
								/	
								/	

NOTE: To add extra rows in Word, click anywhere in the last row. A plus (+) sign should appear on the bottom right corner of the row. Click the plus (+) sign to add a row. Repeat as needed.

1. To determine whether a unit has been modified, evaluate if changes have been made to the unit that impact emissions or that trigger modification as defined in 20.11.41.7(U) NMAC. Also, consider if any changes that were made alter the status from exempt to non-exempt. If not, put N/A.
2. Basis for Equipment Process Rate or Capacity (*e.g.*, Manufacturer's Data, Field Observation/Test, etc.) _____
   Submit information for each unit as an attachment.

Uncontrolled Emissions Table

(Process potential under physical/operational limitations during a 24 hr/day and 365 day/year = 8760 hrs)

Regulated Emission Units listed on this Table should match up to the same numbered line and Unit as listed on the Regulated Emissions and Controlled Tables. List total HAP values per Emission Unit if overall HAP total for the facility is ≥ 1 ton/yr.

Unit Number*	Nitrogen Oxides (NO_X)		Carbon Monoxide (CO)		Nonmethane Hydrocarbons/Volatile Organic Compounds (NMHC/VOCs)		Sulfur Dioxide (SO_2)		Particulate Matter ≤ 10 Microns (PM_{10})		Particulate Matter ≤ 2.5 Microns ($PM_{2.5}$)		Hazardous Air Pollutants (HAPs)		Method(s) used for Determination of Emissions (AP-42, Material Balance, Field Tests, etc.)
	lb/hr	ton/yr	lb/hr	ton/yr	lb/hr	ton/yr	lb/hr	ton/yr	lb/hr	ton/yr	lb/hr	ton/yr	lb/hr	ton/yr	
UNMH-BLR-1A (Natural Gas)	0.92	4.02	1.93	8.45	0.13	0.55	0.33	1.47	0.041	0.18	0.041	0.18	0.26	1.16	AP-42, Manufacturer Specifications, Field Tests
UNMH-BLR-1A (Diesel)	3.35	14.66	0.84	3.67	0.033	0.15	0.036	0.16	0.33	1.47	0.33	1.47	0.0068	0.030	AP-42
UNMH-BLR-2A (Natural Gas)	0.92	4.02	1.93	8.45	0.13	0.55	0.33	1.47	0.041	0.18	0.041	0.18	0.26	1.16	AP-42, Manufacturer Specifications, Field Tests
UNMH-BLR-2A (Diesel)	3.35	14.66	0.84	3.67	0.033	0.15	0.036	0.16	0.33	1.47	0.33	1.47	0.0068	0.030	AP-42
UNMH-BLR-3A (Natural Gas)	0.24	1.03	0.49	2.16	0.032	0.14	0.086	0.38	0.011	0.046	0.011	0.046	0.068	0.30	AP-42, Manufacturer Specifications, Field Tests
UNMH-BLR-3A (Diesel)	0.86	3.75	0.21	0.94	0.0086	0.038	0.0091	0.040	0.086	0.38	0.086	0.38	0.0017	0.0076	AP-42
UNMH-BLR-4A (Natural Gas)	0.24	1.03	0.49	2.16	0.032	0.14	0.086	0.38	0.011	0.046	0.011	0.046	0.068	0.30	AP-42, Manufacturer Specifications, Field Tests
UNMH-BLR-4A (Diesel)	0.86	3.75	0.21	0.94	0.0086	0.038	0.0091	0.040	0.086	0.38	0.086	0.38	0.0017	0.0076	AP-42
UNMH-BLR-5A (Natural Gas)	0.24	1.03	0.49	2.16	0.032	0.14	0.086	0.38	0.011	0.046	0.011	0.046	0.068	0.30	AP-42, Manufacturer Specifications, Field Tests
UNMH-BLR-5A (Diesel)	0.86	3.75	0.21	0.94	0.0086	0.038	0.0091	0.040	0.086	0.38	0.086	0.38	0.0017	0.0076	AP-42
UNMH-BLR-6A (Natural Gas)	0.24	1.03	0.49	2.16	0.032	0.14	0.086	0.38	0.011	0.046	0.011	0.046	0.068	0.30	AP-42, Manufacturer Specifications, Field Tests
UNMH-BLR-6A (Diesel)	0.86	3.75	0.21	0.94	0.0086	0.038	0.0091	0.040	0.086	0.38	0.086	0.38	0.0017	0.0076	AP-42

Unit Number*	Nitrogen Oxides (NO_X)		Carbon Monoxide (CO)		Nonmethane Hydrocarbons/Volatile Organic Compounds (NMHC/VOCs)		Sulfur Dioxide (SO_2)		Particulate Matter ≤ 10 Microns (PM_{10})		Particulate Matter ≤ 2.5 Microns ($PM_{2.5}$)		Hazardous Air Pollutants (HAPs)		Method(s) used for Determination of Emissions (AP-42, Material Balance, Field Tests, etc.)
	lb/hr	ton/yr	lb/hr	ton/yr	lb/hr	ton/yr	lb/hr	ton/yr	lb/hr	ton/yr	lb/hr	ton/yr	lb/hr	ton/yr	
UNMH-BLR-3B (Natural Gas)	1.13	4.94	2.37	10.37	0.15	0.68	0.41	1.80	0.051	0.22	0.051	0.22	0.32	1.42	AP-42, Manufacturer Specifications, Field Tests
UNMH-BLR-3B (Diesel)	4.11	17.98	1.03	4.50	0.041	0.18	0.044	0.19	0.41	1.80	0.41	1.80	0.0083	0.037	AP-42
UNMH-EG-1A	26.14	114.48	3.90	17.08	1.28	5.62	0.022	0.097	1.27	5.58	1.27	5.58	0.017	0.076	AP-42, Stack Test Data
UNMH-EG-2A	22.18	97.13	12.64	55.38	1.17	5.11	0.027	0.12	0.73	3.20	0.73	3.20	0.021	0.092	AP-42, NSPS Tier II Emission Factors
UNMH-EG-3A	22.18	97.13	12.64	55.38	1.17	5.11	0.027	0.12	0.73	3.20	0.73	3.20	0.021	0.092	AP-42, NSPS Tier II Emission Factors
UNMH-EG-4A	25.13	110.08	14.33	62.76	1.32	5.79	0.030	0.13	0.83	3.62	0.83	3.62	0.024	0.10	AP-42, NSPS Tier II Emission Factors
UNMH-EG-5A	25.13	110.08	14.33	62.76	1.32	5.79	0.030	0.13	0.83	3.62	0.83	3.62	0.024	0.10	AP-42, NSPS Tier II Emission Factors
UNMH-EG-6A	27.54	120.62	1.93	8.46	1.45	6.35	0.035	0.16	0.26	1.13	0.26	1.13	0.028	0.12	AP-42, Manufacturer Specifications
UNMH-EG-7A	27.54	120.62	1.93	8.46	1.45	6.35	0.035	0.16	0.26	1.13	0.26	1.13	0.028	0.12	AP-42, Manufacturer Specifications
UNMH-EG-8A	27.54	120.62	1.93	8.46	1.45	6.35	0.035	0.16	0.26	1.13	0.26	1.13	0.028	0.12	AP-42, Manufacturer Specifications
UNMH-EG-9A	27.54	120.62	1.93	8.46	1.45	6.35	0.035	0.16	0.26	1.13	0.26	1.13	0.028	0.12	AP-42, Manufacturer Specifications
UNMH-EG-10A	2.04	8.92	0.50	2.19	0.11	0.47	0.66	2.91	0.057	0.25	0.057	0.25	0.014	0.06	AP-42, Manufacturer Specifications
CT-1	-	-	-	-	-	-	-	-	0.17	0.73	0.0010	0.0043	-	-	NMED Guidance Document, Manufacturer Specifications
CT-2	-	-	-	-	-	-	-	-	0.17	0.73	0.0010	0.0043	-	-	NMED Guidance Document, Manufacturer Specifications
CT-3	-	-	-	-	-	-	-	-	0.17	0.73	0.0010	0.0043	-	-	NMED Guidance Document,

Unit Number*	Nitrogen Oxides (NO_X)		Carbon Monoxide (CO)		Nonmethane Hydrocarbons/Volatile Organic Compounds (NMHC/VOCs)		Sulfur Dioxide (SO_2)		Particulate Matter ≤ 10 Microns (PM_{10})		Particulate Matter ≤ 2.5 Microns ($PM_{2.5}$)		Hazardous Air Pollutants (HAPs)		Method(s) used for Determination of Emissions (AP-42, Material Balance, Field Tests, etc.)
	lb/hr	ton/yr	lb/hr	ton/yr	lb/hr	ton/yr	lb/hr	ton/yr	lb/hr	ton/yr	lb/hr	ton/yr	lb/hr	ton/yr	
															Manufacturer Specifications
CT-4	-	-	-	-	-	-	-	-	0.060	0.26	0.00035	0.0015	-	-	NMED Guidance Document, Manufacturer Specifications
CT-5	-	-	-	-	-	-	-	-	0.060	0.26	0.00035	0.0015	-	-	NMED Guidance Document, Manufacturer Specifications
CT-6	-	-	-	-	-	-	-	-	0.060	0.26	0.00035	0.0015	-	-	NMED Guidance Document, Manufacturer Specifications
Totals of Uncontrolled Emissions**	**247.17**	**1099.73**	**74.28**	**340.93**	**12.70**	**56.27**	**2.37**	**11.02**	**7.58**	**33.96**	**6.90**	**31.00**	**1.36**	**6.07**	

NOTE: To add extra rows in Word, click anywhere in the second-to-last row. A plus (+) sign should appear on the bottom right corner of the row. Click the plus (+) sign to add a row. Repeat as needed.

*A permit is required and this application along with the additional checklist information requested on the Permit Application checklist must be provided if:

(1) any one of these process units <u>or</u> combination of units, has an uncontrolled emission rate greater than or equal to (≥) 10 lbs/hr or 25 tons/yr for any of the above pollutants, excluding HAPs, based on 8,760 hours of operation; or

(2) any one of these process units <u>or</u> combination of units, has an uncontrolled emission rate ≥ 2 tons/yr for any single HAP or ≥ 5 tons/yr for any combination of HAPs based on 8,760 hours of operation; or

(3) any one of these process units <u>or</u> combination of units, has an uncontrolled emission rate ≥ 5 tons/yr for lead (Pb) or any combination of lead and its compounds based on 8,760 hours of operation; or

(4) any one of the process units <u>or</u> combination of units is subject to an Air Board or federal emission limit or standard.

* If all of these process units, individually <u>and</u> in combination, have an uncontrolled emission rate less than (<) 10 lbs/hr or 25 tons/yr for all of the above pollutants (based on 8,760 hours of operation), but > 1 ton/yr for any of the above pollutants, then a source registration is required. <u>A Registration is required, at minimum, for any amount of HAP emissions. Please complete the remainder of this form.</u>

<u> Since both diesel and natural gas can be combusted but can't be burned simultaneously in the dual-fuel boilers at full load, the uncontrolled hourly (lb/hr) emissions include only the maximum of either operating scenario. Worst-case tpy emissions from dual fuels could be at least partially additive, so uncontrolled annual totals include continuous operation of both fuels as a conservative measure. The totals include all equipment (even equipment included for informational purposes only).</u>**

Controlled Emissions Table

(Based on current operations with emission controls OR requested operations with emission controls)

Regulated Emission Units listed on this Table should match up to the same numbered line and Unit as listed on the Regulated Emissions and Uncontrolled Tables. List total HAP values per Emission Unit if overall HAP total for the facility is ≥ 1 ton/yr.

Unit Number	Nitrogen Oxides (NO_X)		Carbon Monoxide (CO)		Nonmethane Hydrocarbons/Volatile Organic Compounds (NMHC/VOCs)		Sulfur Dioxide (SO_2)		Particulate Matter ≤ 10 Microns (PM_{10})		Particulate Matter ≤ 2.5 Microns ($PM_{2.5}$)		Hazardous Air Pollutants (HAPs)		Control Method	% Efficie-ncy[1]
	lb/hr	ton/yr	lb/hr	ton/yr	lb/hr	ton/yr	lb/hr	ton/yr	lb/hr	ton/yr	lb/hr	ton/yr	lb/hr	ton/yr		
UNMH-BLR-1A (Natural Gas)	0.92	4.02	1.93	8.45	0.13	0.55	0.33	1.47	0.041	0.18	0.041	0.18	0.26	1.16	N/A	N/A
UNMH-BLR-1A (Diesel)	3.35	0.031	0.84	0.0076	0.033	0.00031	0.036	0.00032	0.33	0.0031	0.33	0.0031	0.0068	0.000062	Hours of Operation	N/A
UNMH-BLR-2A (Natural Gas)	0.92	4.02	1.93	8.45	0.13	0.55	0.33	1.47	0.041	0.18	0.041	0.18	0.26	1.16	N/A	N/A
UNMH-BLR-2A (Diesel)	3.35	0.031	0.84	0.0076	0.033	0.00031	0.036	0.00032	0.33	0.0031	0.33	0.0031	0.0068	0.000062	Hours of Operation	N/A
UNMH-BLR-3A (Natural Gas)	0.24	1.03	0.49	2.16	0.032	0.14	0.086	0.38	0.011	0.046	0.011	0.046	0.068	0.30	N+1 Redundancy	N/A
UNMH-BLR-3A (Diesel)	0.86	0.021	0.21	0.0054	0.0086	0.00021	0.0091	0.00023	0.086	0.0021	0.086	0.0021	0.0017	0.000044	Hours of Operation	N/A
UNMH-BLR-4A (Natural Gas)	0.24	1.03	0.49	2.16	0.032	0.14	0.086	0.38	0.011	0.046	0.011	0.046	0.068	0.30	N+1 Redundancy	N/A
UNMH-BLR-4A (Diesel)	0.86	0.021	0.21	0.0054	0.0086	0.00021	0.0091	0.00023	0.086	0.0021	0.086	0.0021	0.0017	0.000044	Hours of Operation	N/A
UNMH-BLR-5A (Natural Gas)	0.24	1.03	0.49	2.16	0.032	0.14	0.086	0.38	0.011	0.046	0.011	0.046	0.068	0.30	N+1 Redundancy	N/A
UNMH-BLR-5A (Diesel)	0.86	0.021	0.21	0.0054	0.0086	0.00021	0.0091	0.00023	0.086	0.0021	0.086	0.0021	0.0017	0.000044	Hours of Operation	N/A
UNMH-BLR-6A (Natural Gas)	0.24	1.03	0.49	2.16	0.032	0.14	0.086	0.38	0.011	0.046	0.011	0.046	0.068	0.30	N+1 Redundancy	N/A
UNMH-BLR-6A (Diesel)	0.86	0.021	0.21	0.0054	0.0086	0.00021	0.0091	0.00023	0.086	0.0021	0.086	0.0021	0.0017	0.000044	Hours of Operation	N/A
UNMH-BLR-3B (Natural Gas)	1.13	4.94	2.37	10.37	0.15	0.68	0.41	1.80	0.051	0.22	0.051	0.22	0.32	1.42	N/A	N/A

Unit Number	Nitrogen Oxides (NO_X)		Carbon Monoxide (CO)		Nonmethane Hydrocarbons/Volatile Organic Compounds (NMHC/VOCs)		Sulfur Dioxide (SO_2)		Particulate Matter ≤ 10 Microns (PM_{10})		Particulate Matter ≤ 2.5 Microns ($PM_{2.5}$)		Hazardous Air Pollutants (HAPs)		Control Method	% Efficie-ncy[1]
	lb/hr	ton/yr	lb/hr	ton/yr	lb/hr	ton/yr	lb/hr	ton/yr	lb/hr	ton/yr	lb/hr	ton/yr	lb/hr	ton/yr		
UNMH-BLR-3B (Diesel)	4.11	0.051	1.03	0.013	0.041	0.00051	0.044	0.00054	0.41	0.0051	0.41	0.0051	0.0083	0.00010	Hours of Operation	N/A
UNMH-EG-1A	26.14	6.53	3.90	0.98	1.28	0.32	0.022	0.0055	1.27	0.32	1.27	0.32	0.017	0.0043	Hours of Operation	N/A
UNMH-EG-2A	22.18	5.54	12.64	3.16	1.17	0.29	0.027	0.0067	0.73	0.18	0.73	0.18	0.021	0.0053	Hours of Operation	N/A
UNMH-EG-3A	22.18	5.54	12.64	3.16	1.17	0.29	0.027	0.0067	0.73	0.18	0.73	0.18	0.021	0.0053	Hours of Operation	N/A
UNMH-EG-4A	25.13	6.28	14.33	3.58	1.32	0.33	0.030	0.0076	0.83	0.21	0.83	0.21	0.024	0.0060	Hours of Operation	N/A
UNMH-EG-5A	25.13	6.28	14.33	3.58	1.32	0.33	0.030	0.0076	0.83	0.21	0.83	0.21	0.024	0.0060	Hours of Operation	N/A
UNMH-EG-6A	27.54	5.51	1.93	0.39	1.45	0.29	0.035	0.0071	0.26	0.052	0.26	0.052	0.028	0.0056	Hours of Operation	N/A
UNMH-EG-7A	27.54	5.51	1.93	0.39	1.45	0.29	0.035	0.0071	0.26	0.052	0.26	0.052	0.028	0.0056	Hours of Operation	N/A
UNMH-EG-8A	27.54	5.51	1.93	0.39	1.45	0.29	0.035	0.0071	0.26	0.052	0.26	0.052	0.028	0.0056	Hours of Operation	N/A
UNMH-EG-9A	27.54	5.51	1.93	0.39	1.45	0.29	0.035	0.0071	0.26	0.052	0.26	0.052	0.028	0.0056	Hours of Operation	N/A
UNMH-EG-10A	2.04	0.41	0.50	0.10	0.11	0.021	0.66	0.13	0.057	0.011	0.057	0.011	0.014	0.0028	Hours of Operation	N/A
CT-1	-	-	-	-	-	-	-	-	0.17	0.73	0.0010	0.0043	-	-	N/A	N/A
CT-2	-	-	-	-	-	-	-	-	0.17	0.73	0.0010	0.0043	-	-	N/A	N/A
CT-3	-	-	-	-	-	-	-	-	0.17	0.73	0.0010	0.0043	-	-	N/A	N/A
CT-4	-	-	-	-	-	-	-	-	0.060	0.26	0.00035	0.0015	-	-	N/A	N/A
CT-5	-	-	-	-	-	-	-	-	0.060	0.26	0.00035	0.0015	-	-	N/A	N/A
CT-6	-	-	-	-	-	-	-	-	0.060	0.26	0.00035	0.0015	-	-	N/A	N/A

Unit Number	Nitrogen Oxides (NO_X)		Carbon Monoxide (CO)		Nonmethane Hydrocarbons/Volatile Organic Compounds (NMHC/VOCs)		Sulfur Dioxide (SO_2)		Particulate Matter ≤ 10 Microns (PM_{10})		Particulate Matter ≤ 2.5 Microns ($PM_{2.5}$)		Hazardous Air Pollutants (HAPs)		Control Method	% Efficie-ncy[1]
	lb/hr	ton/yr	lb/hr	ton/yr	lb/hr	ton/yr	lb/hr	ton/yr	lb/hr	ton/yr	lb/hr	ton/yr	lb/hr	ton/yr		
Totals of Controlled Emissions[2,3]	**246.32**	**68.88**	**73.79**	**49.92**	**12.67**	**4.96**	**2.28**	**6.05**	**7.49**	**5.03**	**6.82**	**2.07**	**1.29**	**4.68**		

NOTE: To add extra rows in Word, click anywhere in the second-to-last row. A plus (+) sign should appear on the bottom right corner of the row. Click the plus (+) sign to add a row. Repeat as needed.

1. Basis for Control Method % Efficiency (*e.g.*, Manufacturer's Data, Field Observation/Test, AP-42, etc.).

Submit information for each unit as an attachment.

2. **Total emissions are based on the maximum of either natural gas or diesel-fired combustion for all of the boilers and a limitation on the hours of operation for the generators. Worst-case tpy emissions from dual fuels could be at least partially additive, so uncontrolled annual totals include continuous operation of both fuels as a conservative measure. Maximum lb/hr emissions use the maximum emissions from either the combustion of natural gas or diesel for the dual fuel boilers.**
3. **Per guidance from the AQP, out of the 4 new boilers (Units BLR-3A through BLR-6A) only 3 are included in the total controlled emissions as these units operate in a N+1 fashion and only 3 units will operate simultaneously.**

Hazardous Air Pollutants (HAPs) Emissions Table

Report the Potential Emission Rate for each HAP from each source on the Regulated Emission Sources Table that emits a given HAP. Report individual HAPs with ≥ 1 ton/yr total emissions for the facility on this table. Otherwise, report total HAP emissions for each source that emits HAPs and report individual HAPs in the accompanying application package in association with emission calculations. If this application is for a Registration solely due to HAP emissions, report the largest HAP emissions on this table and the rest, if any, in the accompanying application package.

Unit Number	Total HAPs															
	lb/hr	ton/yr	lb/hr	ton/yr	lb/hr	ton/yr	lb/hr	ton/yr	lb/hr	ton/yr	lb/hr	ton/yr	lb/hr	ton/yr	lb/hr	ton/yr
UNMH-BLR-1A (Natural Gas)	0.26	1.16														
UNMH-BLR-1A (Diesel)	0.0068	0.000062														
UNMH-BLR-2A (Natural Gas)	0.26	1.16														
UNMH-BLR-2A (Diesel)	0.0068	0.000062														
UNMH-BLR-3A (Natural Gas)	0.068	0.30														
UNMH-BLR-3A (Diesel)	0.0017	0.000044														
UNMH-BLR-4A (Natural Gas)	0.068	0.30														
UNMH-BLR-4A (Diesel)	0.0017	0.000044														
UNMH-BLR-5A (Natural Gas)	0.068	0.30														
UNMH-BLR-5A (Diesel)	0.0017	0.000044														
UNMH-BLR-6A (Natural Gas)	0.068	0.30														
UNMH-BLR-6A (Diesel)	0.0017	0.000044														
UNMH-BLR-3B (Natural Gas)	0.32	1.42														

Unit Number	Total HAPs															
	lb/hr	ton/yr	lb/hr	ton/yr	lb/hr	ton/yr	lb/hr	ton/yr	lb/hr	ton/yr	lb/hr	ton/yr	lb/hr	ton/yr	lb/hr	ton/yr
UNMH-BLR-3B (Diesel)	0.0083	0.00010														
UNMH-EG-1A	0.017	0.0043														
UNMH-EG-2A	0.021	0.0053														
UNMH-EG-3A	0.021	0.0053														
UNMH-EG-4A	0.024	0.0060														
UNMH-EG-5A	0.024	0.0060														
UNMH-EG-6A	0.028	0.0056														
UNMH-EG-7A	0.028	0.0056														
UNMH-EG-8A	0.028	0.0056														
UNMH-EG-9A	0.028	0.0056														
UNMH-EG-10A	0.014	0.0028														
CT-1	-	-														
CT-2	-	-														
CT-3	-	-														
CT-4	-	-														
CT-5	-	-														
CT-6	-	-														
Totals of HAPs for all units:	**1.29**	**4.68**														

NOTE: To add extra rows in Word, click anywhere in the second-to-last row. A plus (+) sign should appear on the bottom right corner of the row. Click the plus (+) sign to add a row. Repeat as needed.

Use Instructions: Copy and paste the HAPs table here if need to list more individual HAPs.

Purchased Hazardous Air Pollutant Table*

Product Categories (Coatings, Solvents, Thinners, etc.)	Hazardous Air Pollutant (HAP), or Volatile Hazardous Air Pollutant (VHAP) Primary To The Representative As Purchased Product	Chemical Abstract Service Number (CAS) of HAP or VHAP from Representative As Purchased Product	HAP or VHAP Concentration of Representative As Purchased Product (pounds/gallon, or %)	Concentration Determination (CPDS, MSDS, etc.)[1]	Total Product Purchases For Category	(-)	Quantity of Product Recovered & Disposed For Category	(=)	Total Product Usage For Category
N/A - There are no purchased HAPs at this facility.									
2.					lbs/yr gal/yr	(-)	lbs/yr gal/yr	(=)	lbs/yr gal/yr
3.					lbs/yr gal/yr	(-)	lbs/yr gal/yr	(=)	lbs/yr gal/yr
4.					lbs/yr gal/yr	(-)	lbs/yr gal/yr	(=)	lbs/yr gal/yr
5.					lbs/yr gal/yr	(-)	lbs/yr gal/yr	(=)	lbs/yr gal/yr
6.					lbs/yr gal/yr	(-)	lbs/yr gal/yr	(=)	lbs/yr gal/yr
7.					lbs/yr gal/yr	(-)	lbs/yr gal/yr	(=)	lbs/yr gal/yr
8.					lbs/yr gal/yr	(-)	lbs/yr gal/yr	(=)	lbs/yr gal/yr
9.					lbs/yr gal/yr	(-)	lbs/yr gal/yr	(=)	lbs/yr gal/yr
.					lbs/yr gal/yr	(-)	lbs/yr gal/yr	(=)	lbs/yr gal/yr
TOTALS					lbs/yr gal/yr	(-)	lbs/yr gal/yr	(=)	lbs/yr gal/yr

NOTE: To add extra rows in Word, click anywhere in the second-to-last row. A plus (+) sign should appear on the bottom right corner of the row. Click the plus (+) sign to add a row. Repeat as needed.

NOTE: Product purchases, recovery/disposal and usage should be converted to the units listed in this table. If units cannot be converted please contact the Air Quality Program prior to making changes to this table.

1. Submit, as an attachment, information on one (1) product from each Category listed above which best represents the average of all the products purchased in that Category. CPDS = Certified Product Data Sheet; SDS = Safety Data Sheet

*** A Registration is required, at minimum, for any amount of HAP or VHAP emission.**
Emissions from purchased HAP usage should be accounted for on previous tables as appropriate.
A permit may be required for these emissions if the source meets the requirements of 20.11.41 NMAC.

Material and Fuel Storage Table

(*E.g.*, Tanks, barrels, silos, stockpiles, etc.)

Storage Equipment		Product Stored	Capacity (bbls, tons, gals, acres, etc.)	Above or Below Ground	Construction (Welded, riveted) & Color	Installation Date	Loading Rate[1]	Offloading Rate[1]	True Vapor Pressure	Control Equipment	Seal Type	% Eff.[2]
1	**Diesel Tank**	**ULSD**	**20,000 gal**	**Above**	**Dual Wall/White**	**~2009**	**N/A**	**N/A**	**N/A**	**N/A**	**N/A**	**N/A**
2	**Diesel Tank**	**ULSD**	**20,000 gal**	**UST**	**Dual Wall/White**	**~2009**	**N/A**	**N/A**	**N/A**	**N/A**	**N/A**	**N/A**
3	**Diesel Tank**	**ULSD**	**20,000 gal**	**UST**	**Dual Wall/White**	**~2009**	**N/A**	**N/A**	**N/A**	**N/A**	**N/A**	**N/A**
4	**Diesel Tank**	**ULSD**	**16,000 gal**	**Above**	**Dual Wall/White**	**TBD**	**N/A**	**N/A**	**N/A**	**N/A**	**N/A**	**N/A**
5	**Diesel Tank**	**ULSD**	**16,000 gal**	**Above**	**Dual Wall/White**	**TBD**	**N/A**	**N/A**	**N/A**	**N/A**	**N/A**	**N/A**
6	**Diesel Tank**	**ULSD**	**16,000 gal**	**Above**	**Dual Wall/White**	**TBD**	**N/A**	**N/A**	**N/A**	**N/A**	**N/A**	**N/A**
7	**Diesel Tank**	**ULSD**	**16,000 gal**	**Above**	**Dual Wall/White**	**TBD**	**N/A**	**N/A**	**N/A**	**N/A**	**N/A**	**N/A**
8	**Diesel Tank**	**ULSD**	**526 gal**	**Sub Base**	**UL 142 Dual Wall**	**TBD**	**N/A**	**N/A**	**N/A**	**N/A**	**N/A**	**N/A**

NOTE: To add extra rows in Word, click anywhere in the last row. A plus (+) sign should appear on the bottom right corner of the row. Click the plus (+) sign to add a row. Repeat as needed.

1. Basis for Loading/Offloading Rate (*e.g.*, Manufacturer's Data, Field Observation/Test, etc.). **N/A**
   Submit information for each unit as an attachment.
2. Basis for Control Method % Efficiency (*e.g.*, Manufacturer's Data, Field Observation/Test, AP-42, etc.). **N/A**
   Submit information for each unit as an attachment.

Stack Parameters Table

If any equipment from the Regulated Emission Sources Table is also listed in this Stack Table, use the same numbered line for the emission unit on both tables to show the association between the Process Equipment and its stack.

Unit Number and Description		Pollutant (CO, NOx, PM10, etc.)	UTM Easting (m)	UTM Northing (m)	Stack Height (ft)	Stack Exit Temp. (°F)	Stack Velocity (fps)	Stack Flow Rate (cfm)	Stack Inside Diameter (ft)	Stack Type
UNMH-BLR-1A	Boiler	CO, NO_X, PM_{10}, $PM_{2.5}$, SO_2	352659.10	3884133.40	40.90	330.0	25.44	7491.46	2.50	Vertical
UNMH-BLR-2A	Boiler	CO, NO_X, PM_{10}, $PM_{2.5}$, SO_2	352659.00	3884136.90	40.90	330.0	25.44	7491.46	2.50	Vertical
UNMH-BLR-3B	Boiler	CO, NO_X, PM_{10}, $PM_{2.5}$, SO_2	352664.70	3884141.50	40.90	330.0	48.75	9188.49	2.00	Vertical
UNMH-BLR-3A	Boiler	CO, NO_X, PM_{10}, $PM_{2.5}$, SO_2	352328.50	3884167.50	69.00	240.0	122.16	4200.00	0.85	Vertical
UNMH-BLR-4A	Boiler	CO, NO_X, PM_{10}, $PM_{2.5}$, SO_2	352330.00	3884166.80	69.00	240.0	122.16	4200.00	0.85	Vertical
UNMH-BLR-5A	Boiler	CO, NO_X, PM_{10}, $PM_{2.5}$, SO_2	352331.30	3884166.20	69.00	240.0	122.16	4200.00	0.85	Vertical
UNMH-BLR-6A	Boiler	CO, NO_X, PM_{10}, $PM_{2.5}$, SO_2	352332.60	3884165.60	69.00	240.0	122.16	4200.00	0.85	Vertical
CT-1	Cooling Tower	PM_{10}, $PM_{2.5}$	352347.30	3884194.60	81.02	Ambient	42.04	239700.00	11.00	Vertical
CT-2	Cooling Tower	PM_{10}, $PM_{2.5}$	352343.40	3884196.50	81.02	Ambient	42.04	239700.00	11.00	Vertical
CT-3	Cooling Tower	PM_{10}, $PM_{2.5}$	352339.70	3884198.30	81.02	Ambient	42.04	239700.00	11.00	Vertical
CT-4-1*	Cooling Tower	PM_{10}, $PM_{2.5}$	352644.00	3884164.00	26.08	Ambient	43.51	117900.00	7.58	Vertical
CT-4-2*	Cooling Tower	PM_{10}, $PM_{2.5}$	352644.00	3884162.00	26.08	Ambient	43.51	117900.00	7.58	Vertical
CT-5^{+}	Cooling Tower	PM_{10}, $PM_{2.5}$	352645.00	3884134.00	36.83	Ambient	45.04	256800.00	11.00	Vertical
CT-6-1*	Cooling Tower	PM_{10}, $PM_{2.5}$	352647.00	3884144.00	24.58	Ambient	43.51	117900.00	7.58	Vertical
CT-6-2*	Cooling Tower	PM_{10}, $PM_{2.5}$	352647.00	3884141.00	24.58	Ambient	43.51	117900.00	7.58	Vertical
Generators – These sources are not modeled										
UNMH-EG-1A	Emergency Generator	CO, NO_X, PM_{10}, $PM_{2.5}$, SO_2	352657.54	3884172.82	50.00	800.0	38.98	4133.33	1.50	Vertical
UNMH-EG-2A	Emergency Generator	CO, NO_X, PM_{10}, $PM_{2.5}$, SO_2	352669.84	3884172.18	50.00	757.0	44.74	4743.30	1.50	Vertical
UNMH-EG-3A	Emergency Generator	CO, NO_X, PM_{10}, $PM_{2.5}$, SO_2	352684.34	3884172.27	50.00	757.0	44.74	4743.30	1.50	Vertical
UNMH-EG-4A	Emergency Generator	CO, NO_X, PM_{10}, $PM_{2.5}$, SO_2	352725.90	3884170.82	50.00	800.0	44.74	4743.30	1.50	Vertical
UNMH-EG-5A	Emergency Generator	CO, NO_X, PM_{10}, $PM_{2.5}$, SO_2	352746.32	3884170.49	50.00	800.0	44.74	4743.30	1.50	Vertical
UNMH-EG-6A	Emergency Generator	CO, NO_X, PM_{10}, $PM_{2.5}$, SO_2	352320.00	3884193.00	65.00	877.0	210.75	13518.00	1.17	Vertical
UNMH-EG-7A	Emergency Generator	CO, NO_X, PM_{10}, $PM_{2.5}$, SO_2	352324.00	3884191.00	65.00	877.0	210.75	13518.00	1.17	Vertical

Unit Number and Description		Pollutant (CO, NOx, PM10, etc.)	UTM Easting (m)	UTM Northing (m)	Stack Height (ft)	Stack Exit Temp. (°F)	Stack Velocity (fps)	Stack Flow Rate (cfm)	Stack Inside Diameter (ft)	Stack Type
UNMH-EG-8A	Emergency Generator	CO, NO_X, PM_{10}, $PM_{2.5}$, SO_2	352329.00	3884188.00	65.00	877.0	210.75	13518.00	1.17	Vertical
UNMH-EG-9A	Emergency Generator	CO, NO_X, PM_{10}, $PM_{2.5}$, SO_2	352334.00	3884186.00	65.00	877.0	210.75	13518.00	1.17	Vertical
UNMH-EG-10A	Emergency Generator	CO, NO_X, PM_{10}, $PM_{2.5}$, SO_2	352322.63	3884019.64	10.00	954.0	274.83	1439.00	0.33	Rain Cap

NOTE: To add extra rows in Word, click anywhere in the last row. A plus (+) sign should appear on the bottom right corner of the row. Click the plus (+) sign to add a row. Repeat as needed.

***Cooling towers 4 and 6 (CT-4 and CT-6) have two exhaust fans associated with them. As such, the emissions are divided equally between these two fans. The modeled parameters are identical for each fan based on data provided by the manufacturer and UNMH.**

Certification

NOTICE REGARDING SCOPE OF A PERMIT: The Environmental Health Department's issuance of an air quality permit only authorizes the use of the specified equipment pursuant to the air quality control laws, regulations and conditions. Permits relate to air quality control only and are issued for the sole purpose of regulating the emission of air contaminants from said equipment. Air quality permits are not a general authorization for the location, construction and/or operation of a facility, nor does a permit authorize any particular land use or other form of land entitlement. It is the applicant's/permittee's responsibility to obtain all other necessary permits from the appropriate agencies, such as the City of Albuquerque Planning Department or Bernalillo County Department of Planning and Development Services, including but not limited to site plan approvals, building permits, fire department approvals and the like, as may be required by law for the location, construction and/or operation of a facility. For more information, please visit the City of Albuquerque Planning Department website at https://www.cabq.gov/planning and the Bernalillo County Department of Planning and Development Services website at https://www.bernco.gov/planning.

NOTICE REGARDING ACCURACY OF INFORMATION AND DATA SUBMITTED: Any misrepresentation of a material fact in this application and its attachments is cause for denial of a permit or revocation of part or all of the resulting registration or permit, and revocation of a permit for cause may limit the permitee's ability to obtain any subsequent air quality permit for ten (10) years. Any person who knowingly makes any false statement, representation, or certification in any application, record, report, plan or other document filed or required to be maintained under the Air Quality Control Act, NMSA 1978 §§ 74-2-1 to 74-2-17, is guilty of a misdemeanor and shall, upon conviction, be punished by a fine of not more than ten thousand dollars ($10,000) per day per violation or by imprisonment for not more than twelve months, or by both.

I, the undersigned, hereby certify that I have knowledge of the information and data represented and submitted in this application and that the same is true and accurate, including the information and date in any and all attachments, including without limitation associated forms, materials, drawings, specifications, and other data. I also certify that the information represented gives a true and complete portrayal of the existing, modified existing, or planned new stationary source with respect to air pollution sources and control equipment. I understand that there may be significant penalties for submitting false information, including the possibility of fines and imprisonment for knowing violations. I also understand that the person who has applied for or has been issued an air quality permit by the Department is an obligatory party to a permit appeal filed pursuant to 20.11.81 NMAC. Further, I certify that I am qualified and authorized to file this application, to certify the truth and accuracy of the information herein, and bind the source. Moreover, I covenant and agree to comply with any requests by the Department for additional information necessary for the Department to evaluate or make a final decision regarding the application.

Signed this 21 day of July, 20 22

Enrico D. Volpato
Print Name

Executive Director Facility Services UNMH
Print Title

Enrico D. Volpato
Signature

Role: ☐ Owner ☐ Operator

☒ Other Authorized Representative

City of Albuquerque
Environmental Health Department
Air Quality Program

Construction Permit (20.11.41 NMAC)
Application Checklist

This checklist must be returned with the application

Any person seeking a new air quality permit, a permit modification, or an emergency permit under 20.11.41 NMAC (Construction Permits) shall do so by filing a written application with the Albuquerque-Bernalillo County Joint Air Quality Program, which administers and enforces local air quality laws for the City of Albuquerque ("City") and Bernalillo County ("County"), on behalf of the City Environmental Health Department ("Department").

The Department will rule an application administratively incomplete if it is missing or has incorrect information. The Department may require additional information that is necessary to make a thorough review of an application, including but not limited to technical clarifications, emission calculations, emission factor usage, additional application review fees if any are required by 20.11.2 NMAC, and new or additional air dispersion modeling.

If the Department has ruled an application administratively incomplete three (3) times, the Department will deny the permit application. Any fees submitted for processing an application that has been denied will not be refunded. If the Department denies an application, a person may submit a new application and the fee required for a new application. The applicant has the burden of demonstrating that a permit should be issued.

The following are the minimum elements that shall be included in the permit application before the Department can determine whether an application is administratively complete and ready for technical review. It is not necessary to include an element if the Department has issued a written waiver regarding the element and the waiver accompanies the application. However, the Department shall not waive any federal requirements.

At all times before the Department has made a final decision regarding the application, an applicant has a duty to promptly supplement and correct information the applicant has submitted in an application to the Department. The applicant's duty to supplement and correct the application includes but is not limited to relevant information acquired after the applicant has submitted the application and additional information the applicant otherwise determines is relevant to the application and the Department's review and decision. While the Department is processing an application, regardless of whether the Department has determined the application is administratively complete, if the Department determines that additional information is necessary to evaluate or make a final decision regarding the application, the Department may request additional information and the applicant shall provide the requested additional information.

NOTICE REGARDING PERMIT APPEALS: A person who has applied for or has been issued an air quality permit by the Department shall be an obligatory party to a permit appeal filed pursuant to 20.11.81 NMAC.

NOTICE REGARDING SCOPE OF A PERMIT: The Department's issuance of an air quality permit only authorizes the use of the specified equipment pursuant to the air quality control laws, regulations and conditions. Permits relate to air quality control only and are issued for the sole purpose of regulating the emission of air contaminants from said equipment. Air quality permits are not a general authorization for the location, construction and/or operation of a facility, nor does a permit authorize any particular land use or other form of land entitlement. It is the applicant's/permittee's responsibility to obtain all other necessary permits from the appropriate agencies, such as the City Planning Department or County Department of Planning and Development Services, including but not limited to site plan approvals, building permits, fire department approvals and the like, as may be required by law for the location, construction and/or operation of a facility. For more information, please visit the City Planning Department website at https://www.cabq.gov/planning and the County Department of Planning and Development Services website at https://www.bernco.gov/planning.

The Applicant shall:

20.11.41.13(A) NMAC – Pre-Application Requirements:

Item	Completed	NA[1]	Waived[2]
(1) Request a pre-application meeting with the Department using the pre-application meeting request form.	☒	☐	☐
(2) Attend the pre-application meeting. Date of Pre-application meeting: 2/25/2021	☒	☐	☐

1. *Not Applicable*
2. *It is not necessary to include an element if the Department has issued a written waiver regarding the element and the waiver accompanies the application. However, the Department shall not waive any federal requirements.*

20.11.41.13(B) NMAC – Applicant's Public Notice Requirements:

Item	Included in Application	NA[1]	Waived[2]
(1) Provide public notice in accordance with the regulation, including by certified mail or electronic copy to the designated representative(s) of the recognized neighborhood associations and recognized coalitions that are within one-half mile of the exterior boundaries of the property on which the source is or is proposed to be located.	☒	☐	☐
• Contact list of representative(s) of neighborhood associations and recognized coalitions cannot be more than three months old from the application submittal date.	☒	☐	☐
• Provide notice using the Notice of Intent to Construct form.	☒	☐	☐
(2) In accordance with the regulation, post and maintain in a visible location a weather proof sign provided by the Department.	☒	☐	☐

1. *Not Applicable; For emergency permits, the public notice requirements in 20.11.41.24 NMAC shall apply instead.*
2. *It is not necessary to include an element if the Department has issued a written waiver regarding the element and the waiver accompanies the application. However, the Department shall not waive any federal requirements.*

The Permit Application shall include:

20.11.41.13(E) NMAC – Application Contents

Item	Included In Application	NA[1]	Waived[2]
(1) A complete permit application on the most recent form provided by the Department.	☒	☐	☐
(2) The application form includes:			
a. The owner's name, street and post office address, and contact information;	☒	☐	☐
b. The facility/ operator's name, street address and mailing address, if different from the owner;	☒	☐	☐
c. The consultant's name, and contact information, if applicable;	☒	☐	☐
d. All information requested on the application form is included (*i.e.*, the form is complete).	☒	☐	☐
(3) Date application is submitted.	☒	☐	☐
(4) Sufficient attachments for the following:			
a. Ambient impact analysis using an atmospheric dispersion model approved by the U.S. Environmental Protection Agency, and the Department to demonstrate compliance with the applicable ambient air quality standards. *See* 20.11.01 NMAC. If you are modifying an existing source, the modeling must include the	☒	☐	☐

Item	Included In Application	NA[1]	Waived[2]
emissions of the entire source to demonstrate the impact the new or modified source(s) will have on existing plant emissions.			
b. The air dispersion model has been executed pursuant to a protocol that was approved in advance by the Department.	☒	☐	☐
c. Air dispersion modeling approved protocol date: 7/2/2021	☒	☐	☐
d. Basis or source for each emission rate (including manufacturer's specification sheet, AP-42 section sheets, test data, or corresponding supporting documentation for any other source used).	☒	☐	☐
e. All calculations used to estimate potential emission rates and controlled/proposed emissions.	☒	☐	☐
f. Basis for the estimated control efficiencies and sufficient engineering data for verification of the control equipment operation, including if necessary, design, drawing, test report and factors which affect the normal operation.	☒	☐	☐
g. Fuel data for each existing and/or proposed piece of fuel burning equipment.	☒	☐	☐
h. Anticipated maximum production capacity of the entire facility and the requested production capacity after construction and/or modification.	☒	☐	☐
i. Stack and exhaust gas parameters for all existing and proposed emission stacks.	☒	☐	☐
(5) An operational and maintenance strategy detailing:	☒	☐	☐
a. steps the applicant will take if a malfunction occurs that may cause emission of a regulated air contaminant to exceed a limit that is included in the permit;	☒	☐	☐
b. the nature of emission during routine startup or shutdown of the source and the source's air pollution control equipment; and	☒	☐	☐
c. the steps the application will take to minimize emissions during routine startup or shutdown.	☒	☐	☐
(6) A map, such as a 7.5'-topographic quadrangle map published by the U.S. Geological Survey or a map of equivalent or greater scale, detail, and precision, including a City or County zone atlas map that shows the proposed location of each process equipment unit involved in the proposed construction, modification, or operation of the source, as applicable.	☒	☐	☐
(7) An aerial photograph showing the proposed location of each process equipment unit involved in the proposed construction, modification, relocation or technical revision of the source except for federal agencies or departments involved in national defense or national security as confirmed and agreed by the Department in writing.	☒	☐	☐
(8) A complete description of all sources of regulated air contaminants and a process flow diagram depicting the process equipment unit or units at the facility, both existing and proposed, that are proposed to be involved in routine operations and from which regulated air contaminant emissions are expected to be emitted.	☒	☐	☐
(9) A full description of air pollution control equipment, including all calculations and the basis for all control efficiencies presented, manufacturer's specifications sheets, and site layout and assembly drawings; UTM (universal transverse mercator) coordinates shall be used to identify the location of each emission unit.	☒	☐	☐
(10) A description of the equipment or methods proposed by the applicant to be used for emission measurement.	☒	☐	☐
(11) The maximum and normal operating time schedules of the source after completion of construction or modification, as applicable.	☒	☐	☐
(12) Any other relevant information as the Department may reasonably require, including without limitation:	☒	☐	☐
a. Applicants shall provide documentary proof that the proposed air quality permitted use of the facility's subject property is allowed by the zoning designation of the City or County zoning laws, as applicable. Sufficient documentation includes: (i) a zoning certification from the City Planning Department or County Department of Planning and Development Services, as applicable, if the property is subject to City or County zoning jurisdiction; or (ii) a zoning verification from both planning	☒	☐	☐

Item	Included In Application	NA[1]	Waived[2]
departments if the property is not subject to City or County zoning jurisdiction.[3] A zone atlas map shall not be sufficient.			
(13) The signature of the applicant, operator, owner or an authorized representative, certifying to the accuracy of all information as represented in the application and attachments, if any.	☒	☐	☐
(14) A check or money order for the appropriate application fee or fees required by 20.11.2 NMAC (Fees).	☒	☐	☐

1. *Not Applicable*
2. *It is not necessary to include an element if the Department has issued a written waiver regarding the element and the waiver accompanies the application. However, the Department shall not waive any federal requirements.*
3. *For emergency permit applications, applicants are not required to submit documentation for the subject property's zoning designation.*

City of Albuquerque

Environmental Health Department
Air Quality Program

Permit Application Review Fee Instructions

All source registration, authority-to-construct, and operating permit applications for stationary or portable sources shall be charged an application review fee according to the fee schedule in 20.11.2 NMAC. These filing fees are required for both new construction, reconstruction, and permit modifications applications. Qualified small businesses as defined in 20.11.2 NMAC may be eligible to pay one-half of the application review fees and 100% of all applicable federal program review fees.

Please fill out the permit application review fee checklist and submit with a check or money order payable to the "City of Albuquerque Fund 242" and either:

1. be delivered in person to the Albuquerque Environmental Health Department, 3rd floor, Suite 3023 or Suite 3027, Albuquerque-Bernalillo County Government Center, south building, One Civic Plaza NW, Albuquerque, NM or,

2. mailed to Attn: Air Quality Program, Albuquerque Environmental Health Department, P.O. Box 1293, Albuquerque, NM 87103.

The department will provide a receipt of payment to the applicant. The person delivering or filing a submittal shall attach a copy of the receipt of payment to the submittal as proof of payment Application review fees shall not be refunded without the written approval of the manager. If a refund is requested, a reasonable professional service fee to cover the costs of staff time involved in processing such requests shall be assessed. Please refer to 20.11.2 NMAC (effective January 10, 2011) for more detail concerning the "Fees" regulation as this checklist does not relieve the applicant from any applicable requirement of the regulation.

City of Albuquerque

Environmental Health Department
Air Quality Program

Permit Application Review Fee Checklist Effective January 1, 2022 – December 31, 2022

Please completely fill out the information in each section. Incompleteness of this checklist may result in the Albuquerque Environmental Health Department not accepting the application review fees. If you should have any questions concerning this checklist, please call 768-1972.

I. COMPANY INFORMATION:

Company Name	University of New Mexico Hospitals	
Company Address	2211 Lomas Blvd. NE, Albuquerque, NM 87106	
Facility Name	UNMH	
Facility Address	2211 Lomas Blvd. NE, Albuquerque, NM 87106	
Contact Person	Enrico Volpato	
Contact Person Phone Number	(505) 272-0021	
Are these application review fees for an existing permitted source located within the City of Albuquerque or Bernalillo County?	**Yes**	
If yes, what is the permit number associated with this modification?	**Permit #0953-M4-2TR**	
Is this application review fee for a Qualified Small Business as defined in 20.11.2 NMAC? (See Definition of Qualified Small Business on Page 4)		**No**

II. STATIONARY SOURCE APPLICATION REVIEW FEES:

If the application is for a new stationary source facility, please check all that apply. If this application is for a modification to an existing permit please see Section III.

Check All That Apply	Stationary Sources	Review Fee	Program Element
	Air Quality Notifications		
	AQN New Application	$59.00	2801
	AQN Technical Amendment	$327.00	2802
	AQN Transfer of a Prior Authorization	$327.00	2803
X	*Not Applicable*	*See Sections Below*	
	Stationary Source Review Fees (Not Based on Proposed Allowable Emission Rate)		
	Source Registration required by 20.11.40 NMAC	$ 592.00	2401
	A Stationary Source that requires a permit pursuant to 20.11.41 NMAC or other board regulations and are not subject to the below proposed allowable emission rates	$ 1,220.00	2301
X	*Not Applicable*	*See Sections Below*	
	Stationary Source Review Fees (Based on the Proposed Allowable Emission Rate for the single highest fee pollutant)		
	Proposed Allowable Emission Rate Equal to or greater than 1 tpy and less than 5 tpy	$915	2302
	Proposed Allowable Emission Rate Equal to or greater than 5 tpy and less than 25 tpy	$1,830	2303
	Proposed Allowable Emission Rate Equal to or greater than 25 tpy and less than 50 tpy	$3,661	2304
	Proposed Allowable Emission Rate Equal to or greater than 50 tpy and less than 75 tpy	$5,491	2305
	Proposed Allowable Emission Rate Equal to or greater than 75 tpy and less than 100 tpy	$7,321	2306
	Proposed Allowable Emission Rate Equal to or greater than 100 tpy	$9,152	2307
X	*Not Applicable*	*See Section Above*	

Federal Program Review Fees (In addition to the Stationary Source Application Review Fees above)			
	40 CFR 60 - "New Source Performance Standards" (NSPS)	$1,220	2308
	40 CFR 61 - "Emission Standards for Hazardous Air Pollutants (NESHAPs)	$1,220	2309
	40 CFR 63 - (NESHAPs) Promulgated Standards	$1,220	2310
	40 CFR 63 - (NESHAPs) Case-by-Case MACT Review	$12,202	2311
	20.11.61 NMAC, Prevention of Significant Deterioration (PSD) Permit	$6,101	2312
	20.11.60 NMAC, Non-Attainment Area Permit	$6,101	2313
X	*Not Applicable*	*Not Applicable*	

III. MODIFICATION TO EXISTING PERMIT APPLICATION REVIEW FEES:

If the permit application is for a modification to an existing permit, please check all that apply. If this application is for a new stationary source facility, please see Section II.

Check All That Apply	Modifications	Review Fee	Program Element
Modification Application Review Fees (Not Based on Proposed Allowable Emission Rate)			
	Proposed modification to an existing stationary source that requires a permit pursuant to 20.11.41 NMAC or other board regulations and are not subject to the below proposed allowable emission rates	$ 1,220	2321
X	*Not Applicable*	*See Sections Below*	
Modification Application Review Fees (Based on the Proposed Allowable Emission Rate for the single highest fee pollutant)			
	Proposed Allowable Emission Rate Equal to or greater than 1 tpy and less than 5 tpy	$915	2322
	Proposed Allowable Emission Rate Equal to or greater than 5 tpy and less than 25 tpy	$1,830	2323
	Proposed Allowable Emission Rate Equal to or greater than 25 tpy and less than 50 tpy	$3,661	2324
	Proposed Allowable Emission Rate Equal to or greater than 50 tpy and less than 75 tpy	$5,491	2325
X	Proposed Allowable Emission Rate Equal to or greater than 75 tpy and less than 100 tpy	$7,321	2326
	Proposed Allowable Emission Rate Equal to or greater than 100 tpy	$9,152	2327
	Not Applicable	*See Section Above*	
Major Modifications Review Fees (In addition to the Modification Application Review Fees above)			
	20.11.60 NMAC, Permitting in Non-Attainment Areas	$6,101	2333
	20.11.61 NMAC, Prevention of Significant Deterioration	$6,101	2334
X	*Not Applicable*	*Not Applicable*	
Federal Program Review Fees (This section applies only if a Federal Program Review is triggered by the proposed modification) (These fees are in addition to the Modification and Major Modification Application Review Fees above)			
	40 CFR 60 - "New Source Performance Standards" (NSPS)	$1,220	2328
	40 CFR 61 - "Emission Standards for Hazardous Air Pollutants (NESHAPs)	$1,220	2329
	40 CFR 63 - (NESHAPs) Promulgated Standards	$1,220	2330
	40 CFR 63 - (NESHAPs) Case-by-Case MACT Review	$12,202	2331
	20.11.61 NMAC, Prevention of Significant Deterioration (PSD) Permit	$6,101	2332
	20.11.60 NMAC, Non-Attainment Area Permit	$6,101	2333
X	*Not Applicable*	*Not Applicable*	

IV. ADMINISTRATIVE AND TECHNICAL REVISION APPLICATION REVIEW FEES:

If the permit application is for an administrative or technical revision of an existing permit issued pursuant to 20.11.41 NMAC, please check one that applies.

Check One	Revision Type	Review Fee	Program Element
	Administrative Revisions	$ 250.00	2340
	Technical Revisions	$ 500.00	2341
X	*Not Applicable*	*See Sections II, III or V*	

V. PORTABLE STATIONARY SOURCE RELOCATION FEES:

If the permit application is for a portable stationary source relocation of an existing permit, please check one that applies.

Check One	Portable Stationary Source Relocation Type	Review Fee	Program Element
	No New Air Dispersion Modeling Required	$ 500.00	2501
	New Air Dispersion Modeling Required	$ 750.00	2502
X	*Not Applicable*	*See Sections II, III or V*	

VI. Please submit a check or money order in the amount shown for the total application review fee.

Section Totals	Review Fee Amount
Section II Total	$0
Section III Total	$7,321
Section IV Total	$0
Section V Total	$0
Total Application Review Fee	**$7,321**

I, the undersigned, a responsible official of the applicant company, certify that to the best of my knowledge, the information stated on this checklist, give a true and complete representation of the permit application review fees which are being submitted. I also understand that an incorrect submittal of permit application reviews may cause an incompleteness determination of the submitted permit application and that the balance of the appropriate permit application review fees shall be paid in full prior to further processing of the application.

Signed this 19 **day of** Jan **20** 22

Enrico Volpato
Print Name

Executive Director Facility Services UNMH
Print Title

Enrico D Volpato
Signature

Definition of Qualified Small Business as defined in 20.11.2 NMAC:
"Qualified small business" means a business that meets all of the following requirements:

(1) a business that has 100 or fewer employees;
(2) a small business concern as defined by the federal Small Business Act;
(3) a source that emits less than 50 tons per year of any individual regulated air pollutant, or less than 75 tons per year of all regulated air pollutants combined; and
(4) a source that is not a major source or major stationary source.

Note: Beginning January 1, 2011, and every January 1 thereafter, an increase based on the consumer price index shall be added to the application review fees. The application review fees established in Subsection A through D of 20.11.2.18 NMAC shall be adjusted by an amount equal to the increase in the consumer price index for the immediately-preceding year. Application review fee adjustments equal to or greater than fifty cents ($0.50) shall be rounded up to the next highest whole dollar. Application review fee adjustments totaling less than fifty cents ($0.50) shall be rounded down to the next lowest whole dollar. The department shall post the application review fees on the city of Albuquerque environmental health department air quality program website.

APPENDIX B. PRE-PERMIT APPLICATION MEETING

Pre-Permit Application Meeting Request Form

Pre-Permit Application Meeting Checklist

Pre-Permit Application Meeting Request Form

Air Quality Program- Environmental Health Department

Please complete appropriate boxes and email to aqd@cabq.gov or mail to:

Environmental Health Department
Air Quality Program
P.O. Box 1293
Room 3047
Albuquerque, NM 87103

Name:	**University of New Mexico Hospital (UNMH)**
Company/Organization:	University of New Mexico Hospitals 2211 Lomas Blvd. NE Albuquerque, NM 87106
Point of Contact: **(phone number and email):** **Preferred form of contact (circle one):** Phone E-mail	Michael Celente, Senior Consultant Phone: (505) 266-6611 Email: mcelente@trinityconsultants.com Douglas Brooks, Executive Director Hospital Campus Development Phone: (505) 272-5594 Email: dobrooks@salud.unm.edu
Preferred meeting date/times:	As soon as practicable for the CABQ EHD.
Description of Project:	UNMH is seeking a modification to their existing permit (#0953-M4-1TR) associated with the modernization of the existing hospital. Updates include the construction of a new Hospital Tower, parking garage and Central Utility Plant (CUP). There are a total of eleven (11) new sources associated with this expansion. These sources include four (4) dual-fuel boilers rated at 6 MMBtu/hr; four (4) diesel-fired backup generators rated at 2000 kW; and three (3) cooling towers. Exhaust associated with the construction of the new buildings will not be a regulated source of pollutants and will not be included in the potential to emit calculations or air dispersion modeling.

City of Albuquerque

Environmental Health Department
Air Quality Program

Pre-Permit Application Meeting Checklist

Any person seeking a permit under 20.11.41 NMAC, Authority-to-Construct Permits, shall do so by filing a written application with the Department. Prior to submitting an application, the applicant shall contact the department in writing and request a pre-application meeting for information regarding the contents of the application and the application process. This checklist is provided to aid the applicant and **a copy must be submitted with the application.**

Applications that are ruled incomplete because of missing information will delay any determination or the issuance of the permit. The Department reserves the right to request additional relevant information prior to ruling the application complete in accordance with 20.11.41 NMAC.

Name: University of New Mexico Hospital – 2211 Lomas Blvd Facility
Contact: Douglas Brooks (UNMH) & Michael Celente (Trinity)
Company/Business: University of New Mexico Hospitals

☑ Fill out and submit a Pre-Permit Application Meeting Request form
⇒ Available online at http://www.cabq.gov/airquality

☑ Emission Factors and Control Efficiencies
Notes: AP-42, Manufacturer Specifications, Stack Testing

☑ Air Dispersion modeling guidelines and protocol
Notes: Flagpole receptors on parking structures and elevated surfaces/walkways; surrounding sources, updated background concentrations.

☑ Department Policies
Notes: N/A

☑ Air quality permit fees
Notes: N/A

City of Albuquerque- Environmental Health Department
Air Quality Program- Permitting Section
Phone: (505) 768-1972 Email: aqd@cabq.gov

☑ Public notice requirements

- ☑ Replacement Part 41 Implementation
  - ☑ *20.11.41.*13 B. Applicant's public notice requirements
    - ☑ Providing public notice to neighborhood association/coalitions
      - Neighborhood association: Campus Neighborhood Association, Nob Hill Neighborhood Association, North Campus Neighborhood Association, Silver Hill Neighborhood Association, Spruce Park Neighborhood Association, Summit Park Neighborhood Association, Sycamore Neighborhood Association, University Heights Neighborhood Association
      - Coalition: District 6 Coalition of Neighborhood Associations
      - Note(s): N/A

    - ☑ Posting and maintaining a weather-proof sign
      Notes:

☑ Regulatory timelines

- 30 days to rule application complete
- 90 days to issue completed permit
- Additional time allotted if there is significant public interest and/or a significant air quality issue
  - Public Information Hearing
  - Complex permitting action

Notes:

City of Albuquerque- Environmental Health Department
Air Quality Program- Permitting Section
Phone: (505) 768-1972 Email: aqd@cabq.gov

APPENDIX C. NOTICE OF INTENT TO CONSTRUCT

Notice of Intent (NOI) to Construct

Notice of Intent Cover Letter

Email Documentation of NOI Sent to Neighborhood Associations and Coalitions

Public Notice Sign Guidelines Checklist

Pictures of Posted Notice

NOTICE FROM THE APPLICANT

Notice of Intent to Apply for Air Quality Construction Permit

You are receiving this notice because the New Mexico Air Quality Control Act (20.11.41.13B NMAC) requires any owner/operator proposing to construct or modify a facility subject to air quality regulations to provide public notice by certified mail or electronic mail to designated representatives of recognized neighborhood associations and coalitions within 0.5-mile of the property on which the source is or is proposed to be located.

This notice indicates that the owner/operator intends to apply for an Air Quality Construction Permit from the Albuquerque – Bernalillo County Joint Air Quality Program. Currently, no application for this proposed project has been submitted to the Air Quality Program. Applicants are required to include a copy of this form and documentation of mailed notices with their Air Quality Construction Permit Application.

Proposed Project Information

Applicant's name and address:
Nombre y domicilio del solicitante: University of New Mexico Hospital, 2211 Lomas Blvd. NE, Albuquerque, 87106

Owner / operator's name and address:
Nombre y domicilio del propietario u operador: University of New Mexico Hospitals, 2211 Lomas Blvd. NE, Albuquerque, 87106

Contact for comments and inquires:
Datos actuales para comentarios y preguntas:

Name *(Nombre)*: Enrico Volpato
Address *(Domicilio)*: 2211 Lomas Blvd. NE, Albuquerque, 87106
Phone Number *(Número Telefónico)*: (505) 272-0021
E-mail Address *(Correo Electrónico)*: edvolpato@salud.unm.edu

Actual or estimated date the application will be submitted to the department:
Fecha actual o estimada en que se entregará la solicitud al departamento: July 22, 2022

Description of the source:
Descripción de la fuente: General medical and surgical hospital

Exact location of the source or proposed source:
Ubicación exacta de la fuente o fuente propuesta: 2211 Lomas Blvd. NE, Albuquerque, 87106

Nature of business:
Tipo de negocio: Hospital

Process or change for which the permit is requested:
Proceso o cambio para el cuál de solicita el permiso:

Addition of four (4) dual-fuel boilers rated at 6 MMBtu/hr, four (4) diesel-fired backup generators rated at 1750 kW (2,922 hp), three (3) cooling towers rated at 6,723 gpm associated with the Central Utility Plant (CUP) and one additional emergency generator rated at 200 kW (324 hp) associated with the BBRP building. Replacement of existing boilers (BLR-1A and BLR-2A) with unit rated at 23.4 MMBtu/hr. Updates to emissions for BLR-3B. Updates to modeling parameters and calculations for BLR-1A, 2-A and 3-B based on most recent operational and manufacturer data provided by UNMH including updates to stack heights, temperatures, diameters, and exit velocities compared to current permitted values.

Maximum operating schedule:
Horario máximo de operaciones: 24 hours per day, 7 days a week, and 52 weeks per year

Normal operating schedule:
Horario normal de operaciones: 24 hours per day, 7 days a week, and 52 weeks per year

Preliminary estimate of the maximum quantities of each regulated air contaminant the source will emit:
Estimación preliminar de las cantidades máximas de cada contaminante de aire regulado que la fuente va a emitir:

Air Contaminant *Contaminante de aire*	**Proposed Construction Permit** *Permiso de Construcción Propuesto*		**Net Changes (for permit modification or technical revision)** *Cambio Neto de Emisiones (para modificación de permiso o revisión técnica)*	
	pounds per hour *libras por hora*	tons per year *toneladas por año*	pounds per hour *libras por hora*	tons per year *toneladas por año*
CO	73.79	49.92	+30.99	+16.32
NOx	246.32	68.88	+116.92	+0.88
VOC	12.67	4.96	+6.07	+1.76
SO2	2.28	6.05	+1.26	+2.09
PM10	7.49	5.03	+2.19	+3.43
PM2.5	6.82	2.07	+1.52	+0.47
HAP	1.29	4.68	+1.02	+3.94

Questions or comments regarding this Notice of Intent should be directed to the Applicant. Contact information is provided with the Proposed Project Information on the first page of this notice. To check the status of an Air Quality Construction Permit application, call 311 and provide the Applicant's information, or visit www.cabq.gov/airquality/air-quality-permits.

The Air Quality Program will issue a Public Notice announcing a 30-day public comment period on the permit application for the proposed project when the application is deemed complete. The Air Quality Program does not process or issue notices on applications that are deemed incomplete. More information about the air quality permitting process is attached to this notice.

Air Quality Construction Permitting Overview

This is the typical process to obtain an Air Quality Construction Permit for Synthetic Minor and Minor sources of air pollution from the Albuquerque – Bernalillo County Joint Air Quality Program.

Step 1: Pre-application Meeting: The Applicant and their consultant must request a meeting with the Air Quality Program to discuss the proposed action. If air dispersion modeling is required, Air Quality Program staff discuss the modeling protocol with the Applicant to ensure that all proposed emissions are considered.

> **Notice of Intent from the Applicant:** Before submitting their application, the Applicant is required to notify all nearby neighborhood associations and interested parties that they intend to apply for an air quality permit or modify an existing permit. The Applicant is also required to post a notice sign at the facility location.

Step 2: Administrative Completeness Review and Preliminary Technical Review: The Air Quality Program has 30 days from the day the permit is received to review the permit application to be sure that it is administratively complete. This means that all application forms must be signed and filled out properly, and that all relevant technical information needed to evaluate any proposed impacts is included. If the application is not complete, the permit reviewer will return the application and request more information from the Applicant. Applicants have three opportunities to submit an administratively complete application with all relevant technical information.

> **Public Notice from the Department:** When the application is deemed complete, the Department will issue a Public Notice announcing a 30-day public comment period on the permit application. This notice is distributed to the same nearby neighborhood associations and interested parties that the Applicant sent notices to, and published on the Air Quality Program's website.
>
> During this 30-day comment period, individuals have the opportunity to submit written comments expressing their concerns or support for the proposed project, and/or to request a Public Information Hearing. If approved by the Environmental Health Department Director, Public Information Hearings are held after the technical analysis is complete and the permit has been drafted.

Step 3: Technical Analysis and Draft Permit: Air Quality Program staff review all elements of the proposed operation related to air quality, and review outputs from advanced air dispersion modeling software that considers existing emission levels in the area surrounding the proposed project, emission levels from the proposed project, and meteorological data. The total calculated level of emissions is compared to state and federal air quality standards and informs the decision on whether to approve or deny the Applicant's permit.

Draft Permit: The permit will establish emission limits, standards, monitoring, recordkeeping, and reporting requirements. The draft permit undergoes an internal peer review process to determine if the emissions were properly evaluated, permit limits are appropriate and enforceable, and the permit is clear, concise, and consistent.

> **Public Notice from the Department:** When the technical analysis is complete and the permit has been drafted, the Department will issue a second Public Notice announcing a 30-day public comment period on the technical analysis and draft permit. This second Public Notice, along with the technical analysis documentation and draft permit, will be published on the Air Quality Program's website, and the public notice for availability of the technical analysis and draft permit will only be directly sent to those who requested further information during the first comment period.

During this second 30-day comment period, residents have another opportunity to submit written comments expressing their concerns or support for the proposed project, and/or to request a Public Information Hearing.

Possible Public Information Hearing: The Environmental Health Department Director may decide to hold a Public Information Hearing for a permit application if there is significant public interest and a significant air quality issue. If a Public Information Hearing is held, it will occur after the technical analysis is complete and the permit has been drafted.

Step 4: Public Comment Evaluation and Response: The Air Quality Program evaluates all public comments received during the two 30-day public comment periods and Public Information Hearing, if held, and updates the technical analysis and draft permit as appropriate. The Air Quality Program prepares a response document to address the public comments received, and when a final decision is made on the permit application, the comment response document is published on the Air Quality Program's website and distributed to the individuals who participated in the permit process. If no comments are received, a response document is not prepared.

Step 5: Final Decision on the Application: After public comments are addressed and the final technical review is completed, the Environmental Health Department makes a final decision on the application. If the permit application meets all applicable requirements set forth by the New Mexico Air Quality Control Act and the federal Clean Air Act, the permit is approved. If the permit application does not meet all applicable requirements, it is denied.

Notifications of the final decision on the permit application and the availability of the comment response document is published on the Air Quality Program's website and distributed to the individuals who participated in the permit process.

The Department must approve a permit application if the proposed action will meet all applicable requirements and if it demonstrates that it will not result in an exceedance of ambient air quality standards. Permit writers are very careful to ensure that estimated emissions have been appropriately identified or quantified and that the emission data used are acceptable.

The Department must deny a permit application if it is deemed incomplete three times, if the proposed action will not meet applicable requirements, if estimated emissions have not been appropriately identified or quantified, or if the emission data are not acceptable for technical reasons.

For more information about air quality permitting, visit www.cabq.gov/airquality/air-quality-permits

SUBJECT: Public Notice of Proposed Air Quality Construction Permit Application

Dear Neighborhood Association/Coalition Representative(s),

Why did I receive this public notice?
You are receiving this notice in accordance with New Mexico Administrative Code (NMAC) 20.11.41.13.B(1) which requires any applicant seeking an Air Quality Construction Permit pursuant to 20.11.41 NMAC to provide public notice by certified mail or electronic mail to the designated representative(s) of the recognized neighborhood associations and recognized coalitions that are within one-half mile of the exterior boundaries of the property on which the source is or is proposed to be located.

What is the Air Quality Permit application review process?
The City of Albuquerque, Environmental Health Department, Air Quality Program (Program) is responsible for the review and issuance of Air Quality Permits for any stationary source of air contaminants within Bernalillo County. Once the application is received, the Program reviews each application and rules it either complete or incomplete. Complete applications will then go through a 30-day public comment period. Within 90 days after the Program has ruled the application complete, the Program shall issue the permit, issue the permit subject to conditions, or deny the requested permit or permit modification. The Program shall hold a Public Information Hearing pursuant to 20.11.41.15 NMAC if the Director determines there is significant public interest and a significant air quality issue is involved.

What do I need to know about this proposed application?

Applicant Name	University of New Mexico Hospitals
Site or Facility Name	University of New Mexico Hospital
Site or Facility Address	2211 Lomas Blvd NE, Albuquerque, NM 87106
New or Existing Source	EXISTING
Anticipated Date of Application Submittal	July 22, 2022
Summary of Proposed Source to Be Permitted	Addition of four (4) dual-fuel boilers rated at 6 MMBtu/hr, four (4) diesel-fired backup generators rated at 1750 kW (2,922 hp), three (3) cooling towers rated at 6,723 gpm associated with the Central Utility Plant (CUP) and one additional emergency generator rated at 200 kW (324 hp) associated with the BBRP building. Replacement of existing boilers (BLR-1A and BLR-2A) with unit rated at 23.4 MMBtu/hr. Updates to emissions for BLR-3B. Updates to modeling parameters and calculations for BLR-1A, 2-A and 3-B based on most recent operational and manufacturer data provided by UNMH including updates to stack heights, temperatures, diameters, and exit velocities compared to current permitted values.

What emission limits and operating schedule are being requested?
See attached Notice of Intent to Construct form for this information.

How do I get additional information regarding this proposed application?
For inquiries regarding the proposed source, contact:

- Enrico Volpato
- edvoplato@salud.unm.edu
- (505) 272-0021

For inquiries regarding the air quality permitting process, contact:

- City of Albuquerque Environmental Health Department Air Quality Program
- aqd@cabq.gov
- (505) 768-1972

Mike Celente

From: Mike Celente
Sent: Friday, July 22, 2022 2:12 PM
To: calmartin93@gmail.com; saralosborne@gmail.com; campus.neighborhood.assoc@gmail.com; info@willsonstudio.com; mandy@theremedydayspa.com; jeffh@clnabq.org; meyster1@me.com; theboard@nobhill-nm.com; tdavisnm@gmail.com; sarakoplik@hotmail.com; northcampusna@gmail.com; dbodinem@gmail.com; ja.montalbano@gmail.com; silverhillabq@gmail.com; bartj505@gmail.com; jrcochr@gmail.com; jmhartnm@gmail.com; elisha.allen@gmail.com; richard@vigliano.net; mg411@q.com; juliemkidder@gmail.com; sricdon@earthlink.net; info@uhanm.org; maiamullen@gmail.com
Cc: Munoz-Dyer, Carina G.; Pomo, Elizabeth
Subject: Public Notice of Proposed Air Quality Construction Permit Application - University of New Mexico Hospital
Attachments: UNMH_Notice_of_Intent_to_Construct 2022 0722.pdf

SUBJECT: Public Notice of Proposed Air Quality Construction Permit Application

Dear Neighborhood Association/Coalition Representative(s),

Why did I receive this public notice?
You are receiving this notice in accordance with New Mexico Administrative Code (NMAC) 20.11.41.13.B(1) which requires any applicant seeking an Air Quality Construction Permit pursuant to 20.11.41 NMAC to provide public notice by certified mail or electronic mail to the designated representative(s) of the recognized neighborhood associations and recognized coalitions that are within one-half mile of the exterior boundaries of the property on which the source is or is proposed to be located.

What is the Air Quality Permit application review process?
The City of Albuquerque, Environmental Health Department, Air Quality Program (Program) is responsible for the review and issuance of Air Quality Permits for any stationary source of air contaminants within Bernalillo County. Once the application is received, the Program reviews each application and rules it either complete or incomplete. Complete applications will then go through a 30-day public comment period. Within 90 days after the Program has ruled the application complete, the Program shall issue the permit, issue the permit subject to conditions, or deny the requested permit or permit modification. The Program shall hold a Public Information Hearing pursuant to 20.11.41.15 NMAC if the Director determines there is significant public interest and a significant air quality issue is involved.

What do I need to know about this proposed application?

Applicant Name	University of New Mexico Hospitals
Site or Facility Name	University of New Mexico Hospital
Site or Facility Address	2211 Lomas Blvd NE, Albuquerque, NM 87106
New or Existing Source	EXISTING
Anticipated Date of Application Submittal	July 22, 2022
Summary of Proposed Source to Be Permitted	Addition of four (4) dual-fuel boilers rated at 6 MMBtu/hr, four (4) diesel-fired backup generators rated at 1750 kW (2,922 hp), three (3) cooling towers rated at 6,723 gpm associated with the Central Utility Plant (CUP) and one additional emergency generator rated at 200 kW (324 hp) associated with the BBRP building. Replacement of existing boilers (BLR-1A and BLR-2A) with unit rated at 23.4 MMBtu/hr. Updates to emissions for BLR-3B. Updates to modeling parameters and calculations for BLR-1A, 2-A and 3-B based on most recent operational and manufacturer data provided by UNMH including updates to stack heights, temperatures, diameters, and exit velocities compared to current permitted values.

What emission limits and operating schedule are being requested?
See attached Notice of Intent to Construct form for this information.

How do I get additional information regarding this proposed application?
For inquiries regarding the proposed source, contact:

- Enrico Volpato
- edvoplato@salud.unm.edu
- (505) 272-0021

For inquiries regarding the air quality permitting process, contact:

- City of Albuquerque Environmental Health Department Air Quality Program
- aqd@cabq.gov
- (505) 768-1972

Michael Celente, M.S.
Senior Consultant

P 505.266.6611
9400 Holly Ave NE, Building 3, Suite B | Albuquerque, NM 87122
Email: mcelente@trinityconsultants.com

Connect with us: LinkedIn / Facebook / Twitter / YouTube / trinityconsultants.com

Stay current on environmental issues. Subscribe today to receive Trinity's free *EHS Quarterly*.

City of Albuquerque

Environmental Health Department
Air Quality Program

Public Notice Sign Guidelines

Any person seeking a permit under 20.11.41 NMAC, Authority-to-Construct Permits, shall do so by filing a written application with the Department. *Prior to submitting an application, the applicant shall post and maintain a weather-proof sign provided by the department. The applicant shall keep the sign posted until the department takes final action on the permit application; if an applicant can establish to the department's satisfaction that the applicant is prohibited by law from posting, at either location required, the department may waive the posting requirement and may impose different notification requirements.* **A copy of this form must be submitted with your application.**

Applications that are ruled incomplete because of missing information will delay any determination or the issuance of the permit. The Department reserves the right to request additional relevant information prior to ruling the application complete in accordance with 20.11.41 NMAC.

Name: University of New Mexico Hospital, 2211 Lomas Blvd Facility
Contact: Enrico Volpato (UNMH) & Michael Celente (Trinity)
Company/Business: University of New Mexico Hospitals

☑ The sign must be posted at the more visible of either the proposed or existing facility entrance (or, if approved in advance and in writing by the department, at another location on the property that is accessible to the public)

☑ The sign shall be installed and maintained in a condition such that members of the public can easily view, access, and read the sign at all times.

☑ The lower edge of the sign board should be mounted a minimum of 2' above the existing ground surface to facilitate ease of viewing

☑ Attach a picture of the completed, properly posted sign to this document

☐ **Check here if the department has waived the sign posting requirement.**
Alternative public notice details:

Ver. 11/13

Proposed Air Quality Construction Permit

Permiso de Construcción de Calidad del Aire Propuesto

1. **Applicant's Name:**
   Nombre del solicitante: UNIVERSITY OF NEW MEXICO HOSPITAL
   Owner or Operator's Name:
   Nombre del Propietario u Operador: UNIVERSITY OF NEW MEXICO HOSPITALS
2. **Actual or Estimated Date the Application will be Submitted to the Department:**
   Fecha Actual o Estimada en que se Entragará la Solicitud al Departamento: 7/22/2022
3. **Exact Location of the Source or Proposed Source:**
   Ubicación Excata de la Fuente o Fuente Propuesta: 2211 LOMAS BLVD NE, ALBUQUERQUE, NM 87106
4. **Description of the Source:**
   Descripción de la Fuente: GENERAL MEDICAL & SURGICAL HOSPITAL
   Nature of Business:
   Tipo de Negocio: HOSPITAL
   Process or change for which a permit is requested:
   Proceso o cambio para el cuál se solicita el permiso: ADDITION OF 4 BOILERS, 5 GENERATORS & 6 COOLING TOWERS. REPLACEMENT OF 2 EXISTING BOILERS. UPDATES TO EMISSIONS & MODELING PARAMETERS FOR EXISTING BOILER.
   Preliminary estimate of the maximum quantities of each regulated air contaminant the source will emit:
   Estimación preliminar de las cantidades máximas de cada contaminante de aire regulado que la fuente va a emitir:

Air Contaminant *Contaminante de Aire*	Proposed Construction Permit *Permiso de Construcción Propuesto*		Net Change Emissions (for permit modification) *Cambio Neto de Emisiones (para modificación de permiso)*	
	Pounds per hour *libras por hora*	Tons per year *toneladas por año*	Pounds per hour *libras por hora*	Tons per year *toneladas por año*
NO_x	246.32	68.88	+116.92	+0.88
CO	73.79	49.92	+30.99	+16.32
VOC	12.67	4.96	+6.07	+1.76
SO_2	2.28	6.05	+1.26	+2.09
PM_{10}	7.49	5.03	+2.19	+3.43
$PM_{2.5}$	6.82	2.07	+1.52	+0.47
HAP	1.29	4.68	+1.02	+3.94

5. **Maximum Operating Schedule:**
   Horario Máximo de Operaciones: 24/7/365
   Normal Operation Schedule:
   Horario Normal de Operaciones: 24/7/365
6. **Current Contact Information for Comments and Inquiries**
   Datos actuales para Comentarios y Preguntas
   Name *(Nombre):* ENRICO VOLPATO
   Address *(Domicilio):* 2211 LOMAS BLVD NE, ALBUQUERQUE, NM 87106
   Phone Number *(Número Telefónico):* (505) 272-0021
   Email Address *(Correo Electrónico):* EDVOLPATO@SALUD.UNM.EDU

Call 311 for additional information concerning this project, the Air Quality Program, or to file a complaint.
Llame al 311 para obtener información adicional sobre este proyecto, del Programa de Calidad del Aire, o para presenter una queja.
Gọi 311 để biết thêm thông tin hoặc để khiếu nại về dự án này, Chương Trình Chất Lượng Không Khí

City of Albuquerque, Environmental Health Department, Air Quality Program – Stationary Source Permitting
Ciudad de Albuquerque, Departamento de Salud Ambiental, Programa de Calidad del Aire - Permisos para Fuentes Inmóviles
(505) 768-1972, aqd@cabq.gov

THIS SIGN SHALL REMAIN POSTED UNTIL THE DEPARTMENT TAKES FINAL ACTION ON THE PERMIT APPLICATION
ESTE AVISO DEBERÁ DE MANTENERSE PUESTO HASTA QUE EL DEPARTAMENTO TOME UNA DECISIÓN SOBRE LA SOLICITUD DE PERMISO

GATE 1
B79
BLDG 2
green globe
Storm Water Pollution Prevention Information
UNMH - NEW HOSPITAL
BRADBURY STAMM/HUNT
A JOINT VENTURE
PERMIT# NMR10032N
PERMIT# NMR100325
CONTACT PERSON JOHN BLENK
CONTACT PERSON TONY MENDIOLA
CONTACT PH # 505-328-5488
CONTACT PH # 505-250-1211
SWPPP LOCATION
ON-SITE
For More Information Call
1-888-712-5120

APPENDIX D. FACILITY LOCATION AND AERIAL PHOTOGRAPH

Appendix Figure D-1: Facility Location

Appendix Figure D-2: Aerial Photograph of Process Locations

Appendix Figure D-1. Facility Location

UNMH Location

Write a description for your map.

Appendix Figure D-2. Aerial Photograph of Process Locations

All Sources
Legend
Restricted Access
UNM Hospital
87131
CT-3
CT-1
CT-2
EG-8A
EG-9A
BLR-3A
BLR-5A
BLR-6A
EG-1A
EG-2A
EG-3A
EG-4A
EG-5A
CT-4_1
CT-6_1
CT-6_2
BLR_3B
BLR_1A
UNM Hospital
EG-10A
Google Earth
500 ft
N

APPENDIX E. ZONING REQUIREMENTS

Based upon review of applicable New Mexico law and certain Attorney General Opinions, the University's use, and proposed use, of the Proposed Property is not subject to local zoning ordinances. Specifically, Article XII, Section 3 of the New Mexico Constitution states that:

> *"The schools, colleges, university and other institutions provided for by this constitution shall forever remain under the exclusive control of the state, and no part of the proceeds arising from the sale or disposal of any lands granted to the state by congress, or any other funds appropriated, levied or collected for educational purposes, shall be used for the support of any sectarian, denominational or private school, college or university."*

In turn, Article XII, Section 11 of the New Mexico Constitution establishes and designates the University as a state educational institution. Article XII, Section 13 provides that the "legislature shall provide for the control and management of the university of New Mexico by a board of regents . . . ." Pursuant to NMSA 1978, § 21-7-3, "[t]he management and control of the university of New Mexico, the care and preservation of all its property, the erection and construction of all buildings necessary for its use and the disbursements and expenditures of all money shall be vested in a board of seven regents." The New Mexico Attorney General has held that the University is not subject to local municipal ordinances unless the legislature has specifically ceded its control to the municipality. See N.M. Op. AG No. 69-48. To date, the New Mexico legislature has not conceded such control with respect to land use zoning. A copy of N.M. Op. AG No. 69-48 is attached to this letter.

The above and attached documentation in this section note that UNMH is not subject to City of Albuquerque or Bernalillo County ordinances. As a formality, verifications from both Bernalillo County and the City of Albuquerque are included in this section.

BERNALILLO COUNTY
Planning & Development Services
111 Union Square SE, Suite 100
Albuquerque, NM 87102
(505) 314-0350 Fax: (505) 314-0480
www.bernco.gov

ZONING SECTION

REQUEST FOR STATEMENT OF ZONAL CERTIFICATION/ VERIFICATION (ZNP)

PROPERTY OWNER'S NAME	Regents of UNM Real Estate Deparment		PHONE
OWNER'S ADDRESS: MSC06--3595-1 University of NM	CITY: Albuquerque	STATE: NM	ZIP: 87131-0001

APPLICANT'S NAME	Enrico D. Volpato, Executive Director Facilities Services UNMH		PHONE: 505-272-0021
APPLICANT'S ADDRESS: 1301 Lomas Blvd NE	CITY: Albuquerque	STATE: NM	ZIP: 87102

SITE ADDRESS	1117 Stanford Dr NE Albuquerque, NM 87131		
DIRECTIONS			
LEGAL DESCRIPTION	Tract of Land within SW/4 SW/4 T10N R3E Sec 15 Include Port OFVAC Stanford Dr Except Port to Lomas R/W Cont. 32.1700 AC M/L.		
ZONE MAP: J16	CURRENT ZONE(S)	PROPERTY SIZE IN ACREAGE: 32.17	
UPC #: 101605807109030210			
EXISTING BUILDING & USE	University of New Mexico Hospital and related support		

STATEMENT INFORMATION:
(check one)

GENERAL VERIFICATION ☒
No charge

As a State of New Mexico Entity, please verify that the University of New Mexico Hospital is not subject to Bernalillo County Zoning Requirements.

USE-SPECIFIC CERTIFICATION ☐
(please explain) $45.00

STATEMENT SHOULD BE ADDRESSED TO:

NAME	Enrico D. Volpato, Executive Director Facilities Services UNMN		
MAILING ADDRESS: 1301 Lomas Blvd NE	CITY: Albuquerque	STATE: NM	ZIP: 87102

ALL CERTIFICATION/ VERIFICATION STATEMENTS WILL BE SENT BY MAIL UNLESS OTHERWISE NOTED:

___ Fax a copy to_____

___ Contact when completed; applicant will pick up certification statement

___ E-Mail to edvolpato@salud.unm.edu

Enrico D Volpato
Applicant's signature

6/28/22
Date

Rev. 8/14

Steve Niskanen

From: Tom Kay <tkay@bernco.gov>
Sent: Wednesday, June 29, 2022 11:46 AM
To: Steve Niskanen
Cc: Enrico D Volpato (edvolpato@salud.unm.edu); MK Rocky Kearney; Douglas J Brooks; Mike Celente
Subject: RE: UNMH NHT - Request for Zoning Verification

> You don't often get email from tkay@bernco.gov. Learn why this is important

Steve,

1919 Lomas and the University of New Mexico Hospital fall within the city limits of Albuquerque and is outside the zoning jurisdiction of Bernalillo County Zoning. This project will not be subject to Bernalillo County Zoning regulations.

If you have additional questions, please let us know,

Tom

Tom Kay
Zoning Enforcement Manager
Planning and Development Services Department
415 Silver Ave SW 2nd floor Albuquerque NM 87102
Email: tkay@bernco.gov
O: (505) 314-0396 C: (505) 350-1432
www.bernco.gov

From: Steve Niskanen <sniskanen@broaddususa.com>
Sent: Tuesday, June 28, 2022 4:24 PM
To: Zoning <Zoning@bernco.gov>
Cc: Enrico D Volpato (edvolpato@salud.unm.edu) <edvolpato@salud.unm.edu>; MK Rocky Kearney <mkkearney@salud.unm.edu>; Douglas J Brooks <dobrooks@salud.unm.edu>; Mike Celente <MCelente@trinityconsultants.com>
Subject: UNMH NHT - Request for Zoning Verification

> Some people who received this message don't often get email from sniskanen@broaddususa.com. Learn why this is important

CAUTION: This email originated from outside of Bernalillo County. Do not click links or open attachments unless you recognize the sender and know the content is safe.

Dear Bernalillo County Zoning Department,

The City of Albuquerque recently added a new Zoning Verification step to their air permit process, which is the reason we are contacting you today. For context, please refer to the attached WORD document which we need to submit to the Environmental Health Department at the city. We are working with our Air Permit Consultant (Trinity/ Mike Celente) to secure a permit to operate new equipment associated with our new Central Utility Plant that will support the new Hospital we are constructing at 1919 Lomas.

Please review the attached PDF and confirm to Enrico copied here that the University of New Mexico Hospital is not subject to Bernalillo County zoning requirements. I am serving as the Program Manager and will be happy to answer any questions you may have. For expediency, please send the completed form back to all those copied here – thanks.

Best,

Steve Niskanen, CCM, MBA, LEED AP
Program Manager – Vice President
Broaddus & Associates
Cell: 832-948-9418

THE BROADDUS COMPANIES
We exist to advocate for owners and dramatically improve the building process

IT IS CRITICAL you exercise extreme caution opening any office documents attached to email - Be wary of unsolicited attachments

CITY OF ALBUQUERQUE – PLANNING DEPARTMENT
CODE ENFORCEMENT DIVISION

ZONING VERIFICATION REQUEST

DID YOU REMEMBER TO...

- Verify that the property is located within the city limits?
- Provide the legal description of the property and/or the Uniform Property Code (UPC) number?
- Submit your request at least seven (7) days before the verification statement is needed?

City of Albuquerque
PO Box 1293
Albuquerque, New Mexico 87103
www.cabq.gov

FOR STAFF USE ONLY

DATE RECEIVED: _____

RECEIVED BY: _____

ZONE: _____

ZAP: _____

SUBJECT PROPERTY

1117 Stanford Dr NE Albuquerque, NM 87131

ADDRESS

Tract of Land within SW/4 SW/4 T10N R3E Sec 15 Include Port OFVAC Stanford Dr Except Port to Lomas R/W Cont. 32.1700 AC M/L.

LOT BLOCK SUBDIVISION

101605807109030210

UPC #

Regents of UNM Real Estate Deparment

OWNER OF RECORD

APPLICANT INFORMATION

Enrico D. Volpato, Executive Director Facilities Services UNMH

NAME

University of New Mexico Hospital

COMPANY / ORGANIZATION

1301 Lomas Blvd NE, Albuquerque, NM 87102

ADDRESS

505-272-0021 edvolpato@salud.unm.edu

PHONE EMAIL

STATEMENT DETAILS

ADDRESS THE STATEMENT TO: ☒ *SAME AS APPLICANT*

NAME

COMPANY / ORGANIZATION

ADDRESS

PHONE FAX EMAIL

CITY OF ALBUQUERQUE

CODE ENFORCEMENT
Plaza Del Sol Building, Suite 500
600 2nd Street NW
Albuquerque, NM 87102
Tel: (505) 924-3850 Fax: (505) 924-3847

Date: July 6, 2022

VIA Email, edvolpato@salud.un.edu
Enrico D. Volpato
1301 Lomas Blvd. NE
ABQ, NM 87102

RE: **1117 STANFORD DR NE** – the "property".
UPC: 101605807109030210

To Whom It May Concern:

This letter will certify that according to the map on file in this office on July 6, 2022, the property located at: **1117 STANFORD DR NE**, legally described as: **TR OF LAND WITHIN SW/4 SW/4 T10N R3E SEC 15 INCLUDE PORT OFVAC STANFORD DR EXECPT PORT TO LOMAS R/W CONT 32.1700 AC M/L**, Albuquerque, Bernalillo County, New Mexico, is Zoned: R-MH Residential - Multi-family High Density Zone District.

If you have any questions regarding this matter please feel free to contact code enforcement by email at codeenforcement@cabq.gov

Sincerely:

Angelo Metzgar
Code Compliance Manager

January 29, 2021

Geoffrey Papsco
Director, Office of Hospital Facilities
U.S. Department of Housing and Urban Development
26 Federal Plaza, Room 32-102
New York, New York 10278

RE: University of New Mexico Hospitals ("Hospital")
2211 Lomas Avenue, N.E.
Albuquerque, New Mexico 87106

Dear Mr. Papsco:

I am the Deputy University Counsel for Health Sciences in the Office of University Counsel and we are in-house counsel to the Regents of the University of New Mexico (the "University" or "UNM"), for its public operation known as the University of New Mexico Hospitals, and have been requested by our client to provide the U.S. Department of Housing and Urban Development ("HUD") with a legal description of the real property (the "Proposed Mortgaged Property") that will be encumbered by the HUD-insured mortgage in connection with the proposed loan to be made by Wells Fargo Bank, National Association to Hospital, and which will be insured by HUD pursuant to Section 242 and Section 241 of the National Housing Act.

The Proposed Mortgaged Property is described in Exhibit A attached hereto and may be viewed pictorially as shown in the ALTA/ASCM Land Surveys prepared Bohannon Houston, a copy of which are attached as Exhibit B (the "Land Survey"). Based on our review of the Title Report dated January 11, 2021 prepared by Stewart Title (the "Title Report") and the Land Survey, the University owns certain portions of the Proposed Mortgaged Property in fee simple (subject to the mortgage and easements identified in the Title Report) and holds a leasehold interest in certain portions of the Proposed Mortgaged Property (subject to the leasehold mortgage identified in the Title Report) as described and characterized more fully in the attached Title Report. Based upon our reasonable inquiry and reliance on representations made to us by the University and the Hospital, we are not aware of any transactions, transfers, conveyances, mortgages, or liens placed on the Proposed Mortgaged Property between the date of the Title Report and the date of this letter that would indicate that the Hospital does not own the Proposed Mortgaged Property either in fee simple or as a leasehold.

We understand that HUD requires an opinion as to whether the University use, and proposed use, of the Proposed Mortgaged Property complies with local zoning ordinances. In this connection, based upon our review of applicable New Mexico law and certain Attorney General Opinions, the University's use, and proposed use, of the Proposed Mortgaged Property is not subject to local zoning ordinances. Specifically, Article XII, Section 3 of the New Mexico Constitution states that:

> *The schools, colleges, university and other institutions provided for by this constitution shall forever remain under the exclusive control of the state*, and no part of the proceeds arising from the sale or disposal of any lands granted to the state by congress, or any other funds appropriated, levied or collected for educational purposes, shall be used for the support of any sectarian, denominational or private school, college or university.

In turn, Article XII, Section 11 of the New Mexico Constitution establishes and designates the University as a state educational institution. Article XII, Section 13 provides that the "legislature shall provide for the control and management of the university of New Mexico by a board of regents . . . ." Pursuant to NMSA 1978, § 21-7-3, "[t]he management and control of the university of New Mexico, the care and preservation of all its property, the erection and construction of all buildings necessary for its use and the disbursements and expenditures of all money shall be vested in a board of seven regents." The New Mexico Attorney General has held that the University is not subject to local municipal ordinances unless the legislature has specifically ceded its control to the municipality. *See* N.M. Op. AG No. 69-48. To date, the New Mexico legislature has not conceded such control with respect to land use zoning. A copy of N.M. Op. AG No. 69-48 is attached to this letter.

As stated previously, the University was established and designated as s state educational institution pursuant to Article XII, Section 11 of the New Mexico Constitution. See also NMSA 1978, § 21-7-1. Pursuant to NMSA 1978, § 21-7-3, "[t]he management and control of the university of New Mexico, the care and preservation of all its property, the erection and construction of all buildings necessary for its use and the disbursements and expenditures of all money shall be vested in a board of seven regents." And, NMSA 1978, § 21-7-4, provides that "[t]he regents of the university and their successors in office shall constitute a body corporate under the name and style of, the regents of the university of New Mexico, with the right, as such, of suing and being sued, or contracting and being contracted with, of making and using a common seal and altering the same at pleasure." As a result, the University does not have organizational documents as would a corporation, profit or non-profit. The Board of Regents does promulgate Regents Policies, which govern both the operations of the Board of Regents as well as the operations of the University. Those policies are publicly available at https://policy.unm.edu/regents-policies/index.html.

Very truly yours,

Scot Sauder

Scot Sauder, Esq.
Deputy University Counsel for
Health Sciences

A PORTION OF PARCEL B-3

A CERTAIN TRACT OF LAND BEING A PORTION PARCEL B-3 AS SHOWN OF ALTA/ACSM LAND TITLE SURVEY, UNIVERSITY OF NEW MEXICO HOSPITAL, ALBUQUERQUE, NEW MEXICO, JUNE, 2008, FHA PROJECT NO. 116-13003, BY BOHANNAN HUSTON DATED JUNE 19, 2008 AND BEING MORE PARTICULARLY DESCRIBED BY NEW MEXICO STATE PLANE GRID BEARINGS (NAD83 CENTRAL ZONE) AND GROUND DISTANCES AS FOLLOWS:

COMMENCING AT A FOUND 1.25" PLASTIC CAP STAMPED "NEW MEXICO PS 11184" WHENCE A FOUND 1.25" PLASTIC CAP STAMPED "NEW MEXICO PS 11184" BEARS NORTH 00°40'52" EAST A DISTANCE OF 1321.51 FEET;

THENCE AS A TIE SOUTH 45°25'48" EAST A DISTANCE OF 1057.75 FEET TO THE POINT OF BEGINNING, SAID POINT BEING A POINT ON THE NORTHERLY BOUNDARY OF THE TRACT HEREIN DESCRIBED, SAID POINT ALSO BEING A POINT ON THE SOUTHERLY BOUNDARY OF THE NORTH DIVERSION CHANNEL;

THENCE ALONG THE NORTHERLY BOUNDARY OF THE TRACT HEREIN DESCRIBED, NORTH 90°00'00" EAST A DISTANCE OF 30.95 FEET TO A POINT OF CURVATURE,

THENCE ALONG THE ARC OF A CURVE TO THE RIGHT HAVING A CENTRAL ANGLE OF 46°18'25", A RADIUS OF 82.13 FEET, A CHORD BEARING SOUTH 66°50'58" EAST A DISTANCE OF 64.59 FEET AND AN ARC DISTANCE OF 66.38 FEET TO THE NORTHEASTERLY CORNER OF THE TRACT HEREIN DESCRIBED;

THENCE SOUTH 00°00'00" EAST A DISTANCE OF 255.15 FEET TO THE SOUTHEASTERLY CORNER OF THE TRACT HEREIN DESCRIBED;

THENCE NORTH 90°00'00" WEST A DISTANCE OF 130.98 FEET TO THE SOUTHWESTERLY CORNER OF THE TRACT HEREIN DESCRIBED, SAID POINT ALSO BEING A POINT ON THE EASTERLY BOUNDARY OF A PORTION OF UNPLATTED LANDS WITHIN THE SOUTHWEST ONE-QUARTER OF SECTION 15, TOWNSHIP 10 NORTH, RANGE 3 EAST N.M.P.M.;

THENCE NORTH 00°00'00" EAST A DISTANCE OF 280.54 FEET TO THE NORTHWESTERLY CORNER OF THE TRACT HEREIN DESCRIBED;

THENCE NORTH 90°00'00" EAST A DISTANCE OF 40.64 FEET TO THE POINT OF BEGINNING.

SAID TRACT CONTAINS ±0.8329 AC.

PORTION OF THE SOUTHWEST 1/4 OF SECTION 15, T.10N., R.3E., UNPLATTED LANDS OF UNM

A CERTAIN TRACT OF LAND BEING A PORTION OF THE SOUTHWEST ONE-QUARTER OF SECTION 15, TOWNSHIP 10 NORTH, RANGE 3 EAST, NEW MEXICO PRINCIPAL MERIDIAN, CITY OF ALBUQUERUQUE, BERNALILLO COUNTY NEW MEXICO, BEING MORE PARTICULARLY DESCRIBED BY NEW MEXICO STATE PLANE GRID BEARINGS (NAD83 CENTRAL ZONE) AND GROUND DISTANCES AS FOLLOWS:

COMMENCING AT A FOUND 1.25" PLASTIC CAP STAMPED "NEW MEXICO PS 11184" WHENCE A FOUND 1.25" PLASTIC CAP STAMPED "NEW MEXICO PS 11184" BEARS NORTH 00°40'52" EAST A DISTANCE OF 1321.51 FEET;

THENCE AS A TIE SOUTH 11°39'39" EAST A DISTANCE OF 457.78 FEET TO THE POINT OF BEGINNING, SAID POINT ALSO BEING THE NORTHWESTERLY CORNER OF THE TRACT HEREIN DESCRIBED, AND ALSO BEING A POINT ON THE SOUTHERLY BOUNDARY OF THE NORTH DIVERSION CHANNEL;

THENCE ALONG THE NORTHERLY BOUNDARY OF THE TRACT HEREIN DESCRIBED AND SAID SOUTHERLY BOUNDARY OF THE NORTH DIVERSION CHANNEL, ALONG THE ARC OF A NON-TANGENT CURVE TO THE LEFT HAVING A CENTRAL ANGLE OF 07°02'50", A RADIUS OF 1186.10 FEET, A CHORD BEARING SOUTH 60°48'36" EAST A DISTANCE OF 145.79 FEET AND AN ARC DISTANCE OF 145.89 FEET TO A POINT OF COMPOUND CURVATURE;

THENCE ALONG THE ARC OF A NON-TANGENT CURVE TO THE LEFT HAVING A CENTRAL ANGLE OF 03°15'00”, A RADIUS OF 2331.99 FEET, A CHORD BEARING SOUTH 66°30'01” EAST A DISTANCE OF 132.26 FEET AND AN ARC DISTANCE OF 132.28 FEET TO A POINT OF TANGENCY;

THENCE SOUTH 67°35'01” EAST A DISTANCE OF 446.16 FEET TO THE NORTHEASTERLY CORNER OF THE TRACT HEREIN DESCRIBED, SAID POINT ALSO BEING A POINT ON THE NORTHERLY BOUNDARY OF A PORTION OF PARCEL B-3;

THENCE ALONG THE EASTERLY BOUNDARY OF THE TRACT HEREIN DESCRIBED AND THE WESTERLY BOUNDARY OF SAID PORTION OF PARCEL B-3, NORTH 90°00'00” WEST A DISTANCE OF 40.64 FEET TO AN ANGLE POINT;

THENCE SOUTH 00°00' WEST A DISTANCE OF 280.54 FEET TO AN ANGLE POINT, SAID POINT ALSO BEING THE SOUTHWESTERLY CORNER OF SAID PORTION OF PARCEL B-3;

THENCE NORTH 90°00'00” WEST A DISTANCE OF 72.95 FEET TO AN ANGLE POINT;

THENCE SOUTH 21°40'49” EAST A DISTANCE OF 36.34 FEET TO AN ANGLE POINT;

THENCE SOUTH 00°00'00” EAST A DISTANCE OF 75.47 FEET TO THE SOUTHEASTERLY CORNER OF THE TRACT HEREIN DESCRIBED, SAID POINT ALSO BEING A POINT ON THE NORTHERLY RIGHT OF WAY LINE OF LOMAS BOULEVARD;

THENCE ALONG SAID NORTHERLY RIGHT OF WAY LINE OF LOMAS BOULEVARD, ALONG THE ARC OF A TANGENT CURVE TO THE RIGHT HAVING A CENTRAL ANGLE OF 03°40'48”, A RADIUS OF 1223.33 FEET, A CHORD BEARING NORTH 62°04'40” WEST A DISTANCE OF 78.56 FEET AND AN ARC DISTANCE OF 78.57 FEET TO A POINT OF TANGENCY;

THENCE NORTH 60°14'16” WEST A DISTANCE OF 631.37 FEET TO THE SOUTHWESTERLY CORNER OF THE TRACT HEREIN DESCRIBED;

THENCE ALONG THE ARC OF A NON-TANGENT CURVE TO THE RIGHT HAVING A CENTRAL ANGLE OF 29°31'49”, A RADIUS OF 35.00 FEET, A CHORD BEARING NORTH 14°30'39” WEST A DISTANCE OF 17.84 FEET AND AN ARC DISTANCE OF 18.04 FEET TO A POINT;

THENCE NORTH 00°11'58” EAST A DISTANCE OF 32.91 FEET TO A POINT OF CURVATURE;

THENCE ALONG THE ARC OF A TANGENT CURVE TO THE RIGHT HAVING A CENTRAL ANGLE OF 13°36'47”, A RADIUS OF 299.40 FEET, A CHORD BEARING NORTH 07°00'22” EAST A DISTANCE OF 70.97 FEET AND AN ARC DISTANCE OF 71.14 FEET TO A POINT OF TANGENCY;

THENCE NORTH 13°48'45” EAST A DISTANCE OF 219.28 FEET TO THE POINT OF BEGINNING.

SAID TRACT CONTAINS ±5.7815 AC.

ALTA/ACSM LAND TITLE SURVEY
UNIVERSITY OF NEW MEXICO HOSPITAL

ALBUQUERQUE, NEW MEXICO
JUNE, 2008

FHA Project No. 116-13002

TITLE NOTES

TITLE NOTES CORRESPONDING TO SCHEDULE B - SECTION II
(FOR OSIS SITE TITLE NOTES - SEE SHEET 6 OF 7)

T1. Item 1 is not a part of this survey. Rights or claims of parties in possession not shown by the public records.
T2. Easements, or claims of easements, not shown by the public records. None were provided to the surveyor other than shown herein.
T3. Encroachments, overlaps, conflicts in boundary lines, shortages in area, or other matters which would be disclosed by an accurate survey and inspection of the premises. Instances are as stated in the surveyor's certification.
T4. Any lien, claim or right to a lien, for services, labor or material heretofore or hereafter furnished, imposed by law and not shown by the public records. None were provided to the surveyor.
T5. Item 5 is not a part of this survey. Community property, survivorship, or homestead rights, if any, of any spouse of the insured (or vestee in a leasehold or loan policy).
T6. Item 6 is not a part of this survey. Any titles or rights asserted by anyone, including, but not limited to, persons, corporations, governments or other entities, to lands comprising the shores or bottoms of navigable streams, lakes, or land beyond the line of the harbor or bulkhead lines as established or changed by the United States Government.
T7. Item 7 is not a part of this survey. Unpatented mining claims; reservations or exceptions in patents or in acts authorizing the issuance thereof; water rights, claims or title to water.
T8. Item 8 is not a part of this survey. Taxes or assessments which are not shown as existing liens by the public records.
T9. Item 9 is not a part of this survey. Taxes for the year 2007 and thereafter.
T10. Item 10 is not a part of this survey. Defects, liens, encumbrances, adverse claims or other matters, if any, created, first appearing in the public records or attaching subsequent to the effective date hereof but prior to the date the proposed insured acquires for value of record the estate or interest or mortgage thereon covered by this Commitment.
T11. The tracts hereon are subject to reservations for ditches and canals (blanket in nature) constructed by the authority of the United States contained in the Patent from the United States of America, recorded in Book 50, page 517, records of Bernalillo County, New Mexico. (Not Plottable)
T12. The tracts hereon are subject to an easement granted to Public Service Company of New Mexico and Mountain States Telephone and Telegraph Co., by instrument recorded in Book D 243, page 71, records of Bernalillo County, New Mexico and as shown, set forth and delineated on that certain ALTA/ACSM Land Title Survey prepared by Thomas W. Klingenhagen, Registered NM Surveyor No. 5978, dated November 18, 2004 (herein "the 2004 Survey"). (Plotted Herein)
T13. The tracts hereon are subject to an easement granted to Public Service Company of New Mexico and Mountain States Telephone and Telegraph Co., by instrument recorded in Book D 256, page 405, records of Bernalillo County, New Mexico and as set forth on the 2004 Survey. Encroachment of landscaping, fence and building onto said easement as set forth on the 2004 Survey, as to Parcel C of Tract I and Parcel A of Tract II. (Plotted Herein)
T14. The tracts hereon are subject to a Grant of Right-of-Way Easement granted to Public Service Company of New Mexico and Mountain States Telephone and Telegraph Company by instrument recorded in Book D 258, page 637, records of Bernalillo County, New Mexico and as set forth on the 2004 Survey. Encroachment of landscaping, concrete and improvements onto said easement as set forth on the 2004 Survey, as to Parcel C of Tract I and Parcel A of Tract II. (Plotted Herein)
T15. The tracts hereon are subject to an easement granted to Public Service Company of New Mexico and Mountain States Telephone and Telegraph Co., by instrument recorded in Book D 483, page 295, records of Bernalillo County, New Mexico and as set forth on the 2004 Survey. Encroachment of building, landscaping, concrete and asphalt onto said easement as set forth on the 2004 Survey, as to Parcel C of Tract I and Parcel A of Tract II. (Plotted Herein)
T16. The tracts hereon are subject to an easement granted to Public Service Company of New Mexico, a New Mexico corporation and Mountain States Telephone and Telegraph Company, a Colorado corporation by instrument recorded in Book D 582, page 99, records of Bernalillo County, New Mexico and as set forth on the 2004 Survey. Encroachment of building, asphalt, concrete, landscaping, walls, bus shelter and curbing onto said easement as set forth on the 2004 Survey, as to Parcel B of Tract I. (Plotted Herein)
T17. The tracts hereon are subject to a Grant of Right of Way Easement granted to the New Mexico State Highway Commission by instrument recorded in Book D 591, page 291, records of Bernalillo County, New Mexico and as set forth on the 2004 Survey. Encroachment of building, asphalt, concrete, landscaping, walls and curbing onto said easement as set forth on the 2004 Survey, as to Parcel B of Tract I and Parcel A of Tract II. (Plotted Herein)
T18. The tracts hereon are subject to easements as shown and/or provided for on the plat recorded in Plat Book D4, page 8, records of Bernalillo County, New Mexico and as set forth on the 2004 Survey. Encroachment of concrete, walls, landscaping, asphalt, curbing and buildings onto said easement as set forth on the 2004 Survey, as to Parcel B of Tract I. (Plotted Herein)
T19. The tracts hereon are subject to an easement granted to Public Service Company of New Mexico, a New Mexico corporation and The Mountain States Telephone and Telegraph Company, a Colorado corporation by instrument recorded in Book Misc. 135, page 840, records of Bernalillo County, New Mexico and as set forth on the 2004 Survey. Encroachment of building, concrete, asphalt and landscaping onto said easement as set forth on the 2004 Survey, as to Parcel C of Tract I and Parcel A of Tract II. (Plotted Herein)
T20. The tracts hereon are subject to easements reserved in Commission Ordinance No. 57-1969 recorded in Book Misc. 137, page 779, records of Bernalillo County, New Mexico and as set forth on the 2004 Survey. Encroachment of concrete, asphalt, landscaping, curbing and building onto said easements as set forth on the 2004 Survey, as to Parcel B of Tract I. (Plotted Herein)
T21. The tracts hereon are subject to an Right of Way and Easement granted to Southern Union Gas Company by instrument recorded in Book Misc. 175, page 196, records of Bernalillo County, New Mexico and as set forth on the 2004 Survey. Encroachment of concrete, asphalt, landscaping, curbing and building onto said easement as set forth on the 2004 Survey, as to Parcel B of Tract I. (Plotted Herein)
T22. The tracts hereon are subject to an easement Agreement by and between the County of Bernalillo, a political subdivision of the State of New Mexico and the United States of America recorded in Book Misc. 219, page 427, records of Bernalillo County, New Mexico as set forth on the 2004 Survey. Encroachment of buildings and concrete onto said easement as set forth on the 2004 Survey, as to Parcel B of Tract I and Parcel A of Tract II. (Plotted Herein)
T23. The tracts hereon are subject to an easement granted to Public Service Company of New Mexico, a New Mexico corporation and The Mountain States Telephone and Telegraph Company, a Colorado corporation by instrument recorded in Book Misc. 290, page 663, records of Bernalillo County, New Mexico and as set forth on the 2004 Survey. Encroachment of building, walls, landscaping, and concrete onto said easement as set forth on the 2004 Survey, as to Parcel B of Tract I. (Plotted Herein)
T24. The tracts hereon are subject to an easement granted to Public Service Company of New Mexico, a New Mexico corporation and The Mountain States Telephone and Telegraph Company, a Colorado corporation by instrument recorded in Book Misc. 290, page 664, records of Bernalillo County, New Mexico and as set forth on the 2004 Survey. Encroachment of building, landscaping, concrete, traffic signal box, traffic signals, asphalt, concrete and curbing onto said easement as set forth on the 2004 Survey, as to Parcel B of Tract I and Parcel A of Tract II. (Plotted Herein)
T25. The tracts hereon are subject to an easement granted to Public Service Company of New Mexico, a New Mexico corporation and The Mountain States Telephone and Telegraph Company, a Colorado corporation by instrument recorded in Book Misc. 290, page 665, records of Bernalillo County, New Mexico and as set forth on the 2004 Survey. Encroachment of asphalt, curbing, landscaping and walls onto said easement as set forth on the 2004 Survey, as to Parcel B of Tract I and Parcel A of Tract II. (Plotted Herein)
T26. As stated in the Commitment for Title Insurance: The tracts hereon are subject to a Lease Agreement for Operation and Lease of County Healthcare Facilities dated July 1, 1980 by and between The Board of County Commissioners of the County of Bernalillo, (the "County"), as Lessor, and Regents of the University of New Mexico, a body corporate of the State of New Mexico, as Lessee, recorded November 17, 2004 as document number 2004160316, records of Bernalillo County, New Mexico, as to Tract III, which by its terms expires on the entirety that certain Lease Agreement dated January 24, 1978, as amended with the effective dates of July 1, 1978; December 1, 1981; January 1, 1985 and January 9, 1989, by and between the County, as Lessor, and the University of New Mexico, as Lessee, of which only the amendment with an effective date of January 9, 1989 (the "Fourth Supplemental Lease Agreement") was recorded April 3, 1989 in Book Misc. 731A, page 796, records of Bernalillo County, New Mexico. (Not Plotted)
T27. As stated in the Commitment for Title Insurance: The tracts hereon are subject to the First Amendment to Lease Agreement for Operation and Lease of County Healthcare Facilities by and between the Board of County Commissioners of the County of Bernalillo, New Mexico, as Lessor, and Regents of the University of New Mexico, a body corporate of the State of New Mexico, as Lessee, recorded November 17, 2004 as document number 2004160319, records of Bernalillo County, New Mexico, as to Tract II. (Not Plotted)
T28. As stated in the Commitment for Title Insurance: The tracts hereon are subject to a Ground Lease dated December 20, 1988 by and between the County of Bernalillo, a political subdivision of the State of New Mexico, as Landlord, and the Regents of the University of New Mexico, a body corporate of the State of New Mexico, as Tenant, recorded April 3, 1989 in Book Misc. 731A, page 725. The effect of such Lease is predicated upon the terms and conditions of the Lease referred to in Item 26 above and the First Amendment to Lease referred to in Item 27, above, as to Tract II. (Not Plotted)
T29. As stated in the Commitment for Title Insurance: The tracts hereon are subject to an Indenture of Lease dated March 5-1967, as amended with effective dates of March 19,1983 and January 1, 1989, by and between the Regents of the University of New Mexico, a body corporate of the State of New Mexico, as Landlord and the County of Bernalillo, a political subdivision of the State of New Mexico, as Tenant, of which only the amendment with an effective date of January 1, 1989 (the "Second Supplemental Lease Agreement") was recorded April 3, 1989 in Book Misc. 731A, page 795, records of Bernalillo County, New Mexico. The effect of such Lease is predicated upon the terms and conditions of the Lease referred to in Item 26 above and the First Amendment to Lease referred to Item 27 above, as to Tract I. (Not Plotted)
T30. The tracts hereon are subject to an Unrecorded Electric Substation Site Easement granted to Public Service Company of New Mexico dated September 18, 1976. Encroachment of building, asphalt and landscaping onto said easement as set forth on the 2004 Survey, as to Parcel C of Tract I. (Plotted Herein)
T31. The tracts hereon are subject to an easement in favor of the Albuquerque Metropolitan Arroyo Flood Control Authority rendered in that certain Judgment entered March 16, 1989 in Bernalillo County District Court Cause No. A22995 and recorded March 25, 1991 in Book Misc. 209, page 7 as Document No. 17854, as amended by that certain document recorded in Book A99, page 9497 as document number 2005099001, records of Bernalillo County, New Mexico. Encroachment of buildings, asphalt, curbing, concrete and landscaping onto said easement as set forth on the 2004 Survey, as to Parcel B of Tract I. (Plotted Herein)
T44. The tracts hereon are subject to a Grant of Easement recorded in Book A99, page 9498 as document number 2005099002, records of Bernalillo County, New Mexico. (Plotted Herein)

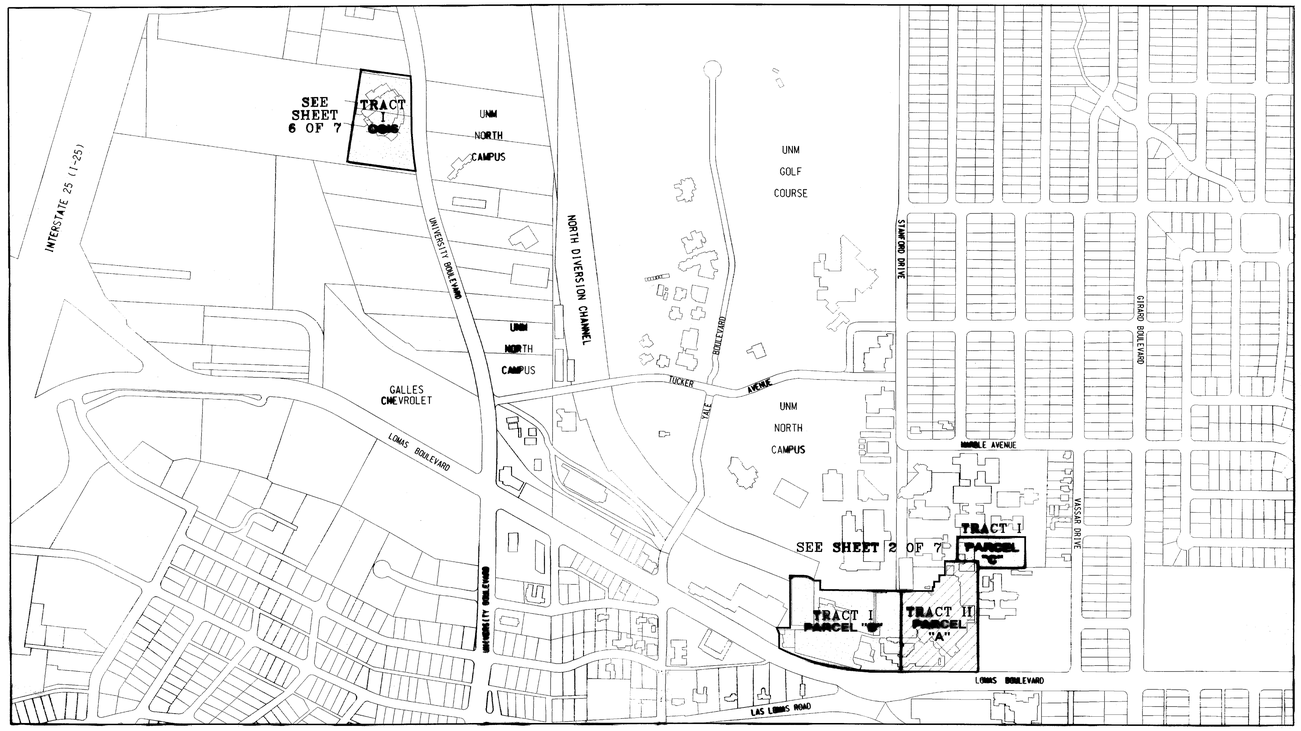

LOCATION MAP
ZONE ATLAS INDEX MAP No. J-15 & J-16
NOT TO SCALE

TRACT I

PARCEL "B" DESCRIPTION

A certain tract of land situate within the southwest one-quarter of Section 15, Township 10 North, Range 3 East, New Mexico Principal Meridian, in the City of Albuquerque, Bernalillo County, New Mexico. Said tract includes a westerly portion of vacated Stanford Drive and being more particularly described by New Mexico State Plane Grid Bearings (NAD 27, Central Zone) and ground distances as follows:

BEGINNING at the southwest corner of the tract herein described, being a point on the northerly right of way line of Lomas Boulevard N.E., whence the City of Albuquerque survey monument "9-J15", having New Mexico State Plane Grid Coordinates X=389,634.32; Y=1,487,263.26 bears S89°15'25"E a distance of 546.87 feet; thence along said northerly right of way line N89°41'18"E, a distance of 144.14 feet to a point of curvature; thence 551.25 feet along the arc of a curve to the right having a radius of 1023.33 feet and a chord bearing N89°52'46"E, a distance of 544.98 feet to the southeast corner of the tract herein described; thence along the easterly boundary line of the tract herein described N02°00'00"E, a distance of 75.00 feet; thence N21°00'00"E, a distance of 38.00 feet; thence N00°00'00"E, a distance of 208.94 feet to the northwest corner of the tract herein described; thence along the northerly boundary line of the tract herein described N89°59'00"E, a distance of 71.00 feet to a point of curvature; thence 64.34 feet along the arc of a curve to the right having a radius of 82.13 feet and a chord bearing S[illegible]°31'1"E a distance of 64.52 feet to a point (non-tangent); thence S00°00'00"E, a distance of 33.34 feet; thence S[illegible]°00'00"E, a distance of 42.52 feet; thence S[illegible]°00'00"E, a distance of 426.12 feet to the northeast corner of the tract herein described; thence along the easterly boundary line of the tract herein described S00°16'40"E, a distance of 443.75 feet to the point and place of beginning.

NOTE: Parcel B contains 6.3453 acres (276,401 Sq.Ft.), more or less.

PARCEL "C" DESCRIPTION

A certain tract of land situate within the southwest one-quarter of Section 15, Township 10 North, Range 3 East, New Mexico Principal Meridian, in the City of Albuquerque, Bernalillo County, New Mexico. Said tract includes a westerly portion of vacated Stanford Drive and being more particularly described by New Mexico State Plane Grid Bearings (NAD 27, Central Zone) and ground distances as follows:

BEGINNING at the southwest corner of the tract herein described, whence the City of Albuquerque survey monument "9-J15", having New Mexico State Plane Grid coordinates X=389,634.32; Y=1,487,263.26 bears S89°42'43"W a distance of 1,075.54 feet; thence along the westerly boundary line of the tract herein described N00°16'40"E, a distance of 119.87 feet to the northwest corner of the tract herein described; thence N89°59'00"E, a distance of 388.75 feet to the northeast corner of the tract herein described; thence S00°00'00"E, a distance of 188.52 feet to the southeast corner of the tract herein described; thence along the southerly boundary line of the tract herein described S89°59'00"W, a distance of 287.56 feet; thence N00°00'00"E, a distance of 68.11 feet; thence S89°45'00"W, a distance of 110.79 feet to the point and place of beginning.

PARCEL "A" DESCRIPTION

A certain tract of land situate within Section 16, Township 10 North, Range 3 East, New Mexico Principal Meridian, City of Albuquerque, Bernalillo County, New Mexico. Said tract being Parcel "A", as the same is shown and designated on the plat of UNI PROP ASSOCIATES, recorded in the office of the County Clerk of Bernalillo County, New Mexico on August 4, 1995 in Volume 95C, folio 183 and as described by warranty deed filed in the office of the County Clerk of Bernalillo County, New Mexico on August 24, 1995 in Book 95-20, page 3000-3005 and together with a 292.00 foot wide tract of land and a 90 foot wide tract of land taken a portion of Parcel B) adjacent to the south boundary of said Parcel "A", and more being more particularly described by New Mexico State Plane Grid Bearings (NAD 27, Central Zone) and ground distances as follows:

BEGINNING at a chiseled "+" in concrete at a point on curve on the westerly right-of-way line of University Boulevard NE and the northeast corner of the tract herein described, whence the City of Albuquerque survey monument "9-J16", having New Mexico State Plane Grid Coordinates (NAD27, General Zone): X=389,623.96; Y=1,486,959.09 bears S27°00'59"W a distance of 1857.78 feet; thence along said right of way line and the east boundary line of the tract herein described:

52.98 feet along the arc of a curve to the right having a radius of 1869.86 and a chord bearing S02°35'31"E a distance of 52.95 feet to a PK nail with a survey washer stamped "NMPS 11104"; thence

S00°11'18"E a distance of 385.00 feet to a PK nail with a survey washer stamped "NMPS 11104"; thence

[illegible] feet along the arc of curve to the right having a radius of 1989.86 feet and a chord bearing S05°40'07"E a distance of 186.75 feet to a PK nail with a survey washer stamped "NLS [illegible]" at the southeast corner of the tract herein described; thence along the southerly boundary line of the tract herein described

S[illegible]°08'36"W, a distance of 384.03 feet to a PK nail with a survey washer stamped "BEHAN LS 10393" at the southwest corner of the tract herein described; thence along the westerly boundary line of the tract herein described

N00°[illegible]'E, a distance of 880.45 feet to a 5/8" rebar with a red plastic survey cap stamped "LS 5978" at the southeast corner of the tract herein described; thence along the northerly boundary line of the tract herein described

S89°[illegible]'36"E, a distance of 290.06 feet to the point and place of beginning.

NOTE: This tract contains 3.9411 acres (171,674 Sq.Ft.), more or less.

TRACT II

PARCEL "A" DESCRIPTION

A certain tract of land situate within the southwest one-quarter of Section 15, Township 10 North, Range 3 East, New Mexico Principal Meridian, in the City of Albuquerque, Bernalillo County, New Mexico. Said tract includes a westerly portion of vacated Stanford Drive and being more particularly described by New Mexico State Plane Grid Bearings (NAD 27, Central Zone) and ground distances as follows:

BEGINNING at the southwest corner of the tract herein described, said point also being the intersection of the northerly right of way line of Lomas Boulevard N.E. and the centerline of vacated Stanford Drive, whence the City of Albuquerque survey monument "9-J16", having New Mexico State Plane Grid coordinates X=389,674.32; Y=1,487,263.26 bears S89°15'25"W a distance of 546.87 feet; thence along the westerly boundary line of the tract herein described

N00°16'40"E, a distance of 443.75 feet; thence along the face of the south wall of a hallway, S89°37'34"E, a distance of 150.39 feet to the intersection with the east face of a hallway; thence continuing along ground,

S89°37'31"E, a distance of 17.24 feet to the intersection with the outside wall of the main hospital, thence along said hospital wall

N00°11'18"E, a distance of 16.78 feet; thence

S89°48'42"E, a distance of 8.02 feet; thence

N00°11'18"E, a distance of 28.97 feet; thence

S89°48'42"E, a distance of 26.76 feet; thence

N00°11'18"E, a distance of 36.45 feet; thence

S89°48'42"E, a distance of 25.91 feet; thence leaving said hospital wall

N00°00'00"E, a distance of 56.27 feet; thence

N89°46'00"E, a distance of 181.57 feet to the northeast corner of the tract herein described; thence along a lenseline

S00°00'00"E, a distance of 623.17 feet to a point on the said northerly right of way line of Lomas Blvd. and the southeast corner of the tract herein described; thence along said right of way line

N89°41'18"E, a distance of 410.00 feet to the point and place of beginning.

TOGETHER WITH all rights under that certain Grant of Easement For Utility Lines from the County of Bernalillo, a political subdivision of the State of New Mexico (the "County") and the Regents of the University of New Mexico, a state educational institution and body corporate under the Constitution and laws of the State of New Mexico (the "University") recorded July 16, 2001 in Book A40, page 9614 as document 2004-99873, records of Bernalillo County, New Mexico.

NOTE: Parcel A contains 5.0133 acres (218,379 Sq.Ft.), more or less.

SURVEYOR'S CERTIFICATE

I hereby certify to the U.S. Department of Housing and Urban Development (HUD), Regents of the University of New Mexico, for its public operation known as University of New Mexico Hospital (Mortgagor), JP Morgan Healthcare and Housing Funding Corporation (Mortgage Servicer), LandAmerica Albuquerque Title Company (Title Insurance Underwriter), and Wells Fargo Bank, National Association (Mortgagee), and to their successors and assigns, that:

I made on the ground survey per record description of the land shown hereon located at 2211 Lomas Blvd. NE and 1213 University Boulevard NE, Albuquerque, Bernalillo County, New Mexico, on June 1 through October 19, 2004, August, 2007 and May through June, 2008 and that the survey and these maps were made in accordance with the HUD Survey Instructions and Report, Form HUD-92457, and the requirements for a Land Title Survey, as defined in the "Minimum Standard Detail Requirements for ALTA/ACSM Land Title Surveys", dated 2005.

To the best of my knowledge, belief, and information, except as shown hereon: there are no encroachments either way across property lines; title lines and lines of actual possession are the same; and the premises are free of any 100/500 year return frequency flood hazard, and such flood free condition is shown on the Federal Flood Insurance Rate Map, Community Panel No. 350010C0353E and Panel No. 350010C0332E, revised November 19, 2003.

Alan R. Benham
Registered NM Surveyor No. 15700
Date: JUNE 19, 2008

ALAN R. BENHAM NEW MEXICO 15700 LICENSED PROFESSIONAL SURVEYOR

NOTES

1. This ALTA/ACSM Land Title Survey was prepared with documents included in the Commitment for Title Insurance, prepared by Landamerica Albuquerque Title, File No. 2371865D, Effective Date: May 6, 2008, 8:00am.
2. Lands occupied by the University of New Mexico, a state educational institution, which includes lands occupied by the University of New Mexico Hospital, are not subject to the City of Albuquerque zoning regulations.
3. All tracts appear to be located in Flood Zone "X", area of minimal flooding, per FIRM Map Number 350010C0353E and Map Number 350010C0332E, Revised November 19, 2003. The surveyor makes no guarantees as to the accuracy of the FIRM Map data - The Local FEMA Agent should be contacted for verification.
4. The gross acreage of all combined tracts is 16.4255 acres (715,495 Sq.Ft.).
5. Distances are ground distances and bearings are New Mexico State Plane Grid Bearings (Central Zone, NAD 27). Basis of bearing is S60°55'46"E, a distance of 3491.24', between "9-J15" and "9-J16".
6. This ALTA document is not subdivisions of lands as defined by NMSA 47-6-2.
7. Fieldwork performed utilized both RTK GPS and Total Station methodology.
8. Said tracts are located in Zone Atlas Index Map No. J-15 and J-16.
9. The OSIS site and Parcel C are currently under construction. Utility and site data shown is correct as of May 28th, 2008. Ongoing site construction and site modifications may render said data void.
10. Utilities shown were collected based on visible evidence and utility designations provided by ABMSTO Utility Locating Co.. Designations were made between May 21st and May 20th 2008. Data relied upon for utility mapping was provided by others - no guarantee can be made to the completeness of said designated utilities. Where shown, it appears that the utility encroaches outside of an easement or is not contained within an easement - it is unknown whether those utilities outside existing easements are encroaching or are private facilities owned by the University of New Mexico and therefore do not need an express easement.
11. All property corners were found or set during the course of this survey. Those located in construction zones may be destroyed. Those corners located on the face of a building were not set.
12. Known utilities serving the subject property, as shown herein, enter and exit the subject property through public rights of way or through easements specifically dedicated for each utility's use as declared by the title commitment and utility designation provided by ABMSTO Utility Locating. Locations where public utilities enter NMH land may not be reflected herein due to the fact that Parcels A, B, and C are lease parcels of a greater unplatted tract and the OSIS Site is a lease parcel of a greater fee tract, outside the scope of this survey.
13. This ALTA document is prepared for the sole use in closing proceedings pursuant to FHA Project No. 116-13002 (Ciro: June/July 2008).

LOCATION MAP, FEE AND LEASE DESCRIPTIONS

Bohannan ▲ Huston
Courtyard I 7500 Jefferson St. NE Albuquerque, NM 87109-4335
ENGINEERING ▲ SPATIAL DATA ▲ ADVANCED TECHNOLOGIES

© 2008, BOHANNAN HUSTON, INC.

P:\080177\SURVEY\GRAPHICS\2008 Update\Final Alta\080177001ALTA01.dgnJOB NO. 080177. 001
21-AUG-2008 - 11:21
dydbery

ALTA/ACSM LAND TITLE SURVEY
UNIVERSITY OF NEW MEXICO HOSPITAL

ALBUQUERQUE, NEW MEXICO
JUNE, 2008

FHA Project No. 116-13002

TABLE FOR THIS SHEET ONLY

CURVE DATA

ID	DELTA	TANGENT	ARC	RADIUS	CHORD	CHORD BEARING
C1	25°49'05"	280.38'	551.25'	1223.33'	546.59'	N76°52'46"W
C2	46°15'18"	35.08'	66.31'	82.13'	64.52'	S66°52'21"E

TABLE FOR THIS SHEET ONLY

TANGENT DATA

ID	BEARING	DISTANCE
T1	N21°40'49"W	36.34'
T2	N90°00'00"E	71.60'
T3	S90°00'00"E	33.74'
T4	S00°00'00"E	42.56'
T5	S89°37'31"E	17.24'
T6	N00°11'18"E	16.78'
T7	S89°48'42"E	8.02'
T8	N00°11'18"E	28.97'
T9	S89°48'42"E	28.76'
T10	N00°11'18"E	36.45'
T11	S89°48'42"E	25.91'
T12	N89°46'00"E	70.77'

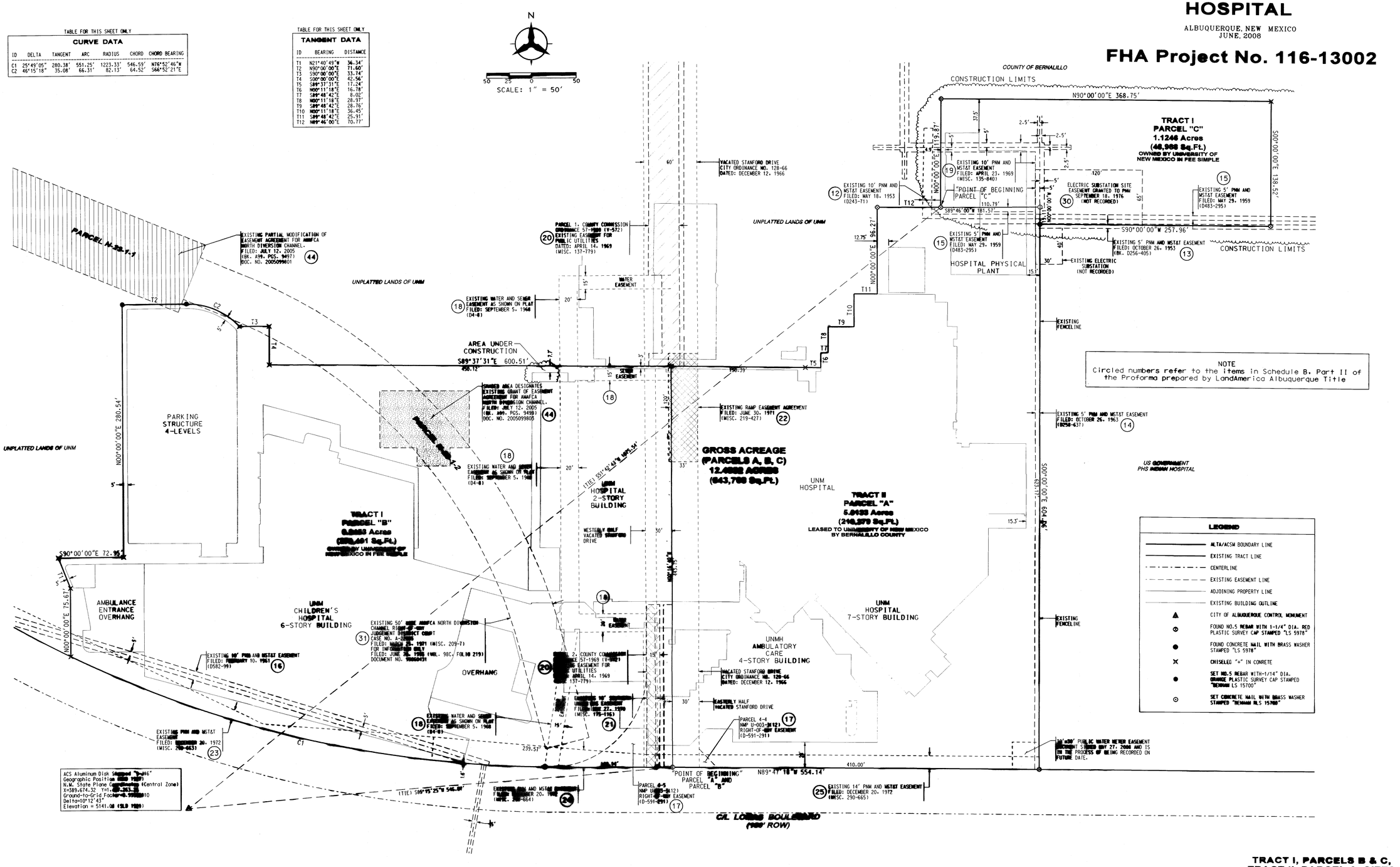

NOTE
Circled numbers refer to the items in Schedule B, Part II of the Proforma prepared by LandAmerica Albuquerque Title

LEGEND

- ALTA/ACSM BOUNDARY LINE
- EXISTING TRACT LINE
- CENTERLINE
- EXISTING EASEMENT LINE
- ADJOINING PROPERTY LINE
- EXISTING BUILDING OUTLINE
- CITY OF ALBUQUERQUE CONTROL MONUMENT
- FOUND NO.5 REBAR WITH 1-1/4" DIA. RED PLASTIC SURVEY CAP STAMPED "LS 5978"
- FOUND CONCRETE NAIL WITH BRASS WASHER STAMPED "LS 5978"
- CHISELED "+" IN CONRETE
- SET NO.5 REBAR WITH 1-1/4" DIA. ORANGE PLASTIC SURVEY CAP STAMPED "BOHANNAN LS 15700"
- SET CONCRETE NAIL WITH BRASS WASHER STAMPED "BOHANNAN RLS 15700"

JOHN R. BOHANNAN
NEW MEXICO
15700
LICENSED PROFESSIONAL SURVEYOR
06/19/08

© 2008, BOHANNAN HUSTON, INC.

SHEET 2 OF 7

TRACT I, PARCELS B & C,
TRACT II, PARCEL A, SITES

Bohannan ▲ Huston
Courtyard I 7500 Jefferson St. NE Albuquerque, NM 87109-4335
ENGINEERING ▲ SPATIAL DATA ▲ ADVANCED TECHNOLOGIES

P:\080177\SURVEY\GRAPHICS\2008 Update\Final Alta\080177001ALTA02.dgn
21-AUG-2008 - 10:49
dyckeny
JOB NO. 080177 001

ALTA/ACSM LAND TITLE SURVEY
UNIVERSITY OF NEW MEXICO HOSPITAL

ALBUQUERQUE, NEW MEXICO
JUNE, 2008

FHA Project No. 116-13002

PARCEL "A-1" DESCRIPTION

A certain tract of land situate within the southwest one-quarter of Section 15, Township 10 North, Range 3 East, New Mexico Principal Meridian, in the City of Albuquerque, Bernalillo County, New Mexico. Said tract includes a easterly portion of vacated Stanford Drive and being more particularly described by New Mexico State Plane Grid Bearings (NAD 27, Central Zone) and ground distances as follows:

BEGINNING at the southeast corner of the tract herein described, said point also being a point on the northerly right-of-way line of Lomas Boulevard N.E., whence the City of Albuquerque survey monument "9-J16", having New Mexico State Plane Grid coordinates X=389,674.32; Y=1,487,263.26 bears S87°22'47"W a distance of 955.99 feet; thence along the said northerly right-of-way line,
N89°47'18"W a distance of 149.42 feet; thence continuing along the southerly boundary line of the tract herein described,
N00°14'00"W a distance of 83.60 feet to the intersection with the outside wall of the main hospital; thence along said hospital wall,
N44°19'22"W a distance of 130.17 feet; thence,
N89°51'34"W a distance of 170.14 feet to the southwest corner of the tract herein described, thence along the westerly boundary line of the tract herein described,
N00°16'40"W a distance of 267.57 feet; thence along the face of the south wall of a hallway,
S89°37'31"E a distance of 150.39 feet to the intersection with the east face of a hallway; thence continuing above ground,
S89°37'31"E a distance of 17.24 feet to the intersection with the outside wall of the main hospital, thence along said hospital wall,
N00°11'18"E a distance of 16.78 feet; thence,
S89°48'42"E a distance of 8.02 feet; thence,
N00°11'18"E a distance of 28.97 feet; thence,
S89°48'42"E a distance of 28.76 feet; thence,
N00°11'18"E a distance of 36.45 feet; thence,
S89°48'42"E a distance of 25.91 feet; thence leaving said hospital wall,
N00°00'00"E a distance of 96.27 feet; thence,
N89°46'00"E a distance of 181.57 feet to the northeast corner of the tract herein described; thence along a fenceline,
S00°00'00"E a distance of 623.17 feet to a point on the said northerly right-of-way line of Lomas Blvd. and the southeast corner of the tract herein described; thence along said right-of-way line, point and place of beginning.

NOTE: Parcel A-1 contains 4.0547 acres (176,623 Sq.Ft.), more or less.

PARCEL "A-2" DESCRIPTION

A certain tract of land situate within the southwest one-quarter of Section 15, Township 10 North, Range 3 East, New Mexico Principal Meridian, in the City of Albuquerque, Bernalillo County, New Mexico. Said tract includes a easterly portion of vacated Stanford Drive and being more particularly described by New Mexico State Plane Grid Bearings (NAD 27, Central Zone) and ground distances as follows:

BEGINNING at the southwest corner of the tract herein described, being a point on the northerly right-of-way line of Lomas Boulevard N.E., whence the City of Albuquerque survey monument "9-J16", having New Mexico State Plane Grid coordinates X=389,674.32; Y=1,487,263.26 bears S85°15'25"W a distance of 546.87 feet; thence along the westerly boundary line of the tract herein described,
N00°16'40"W a distance of 176.18 feet to the northwest corner of the tract herein described; thence along the northerly boundary line of the tract herein described,
S89°51'34"E a distance of 170.14 feet ; thence along the face of Hospital,
S44°19'22"E a distance of 130.17 feet; thence along the easterly boundary line of the tract herein described,
S00°14'00"E a distance of 83.60 feet to a point on the said northerly right-of-way line of Lomas Boulevard N.E.; thence along the said northerly right-of-way line,
N89°47'18"W a distance of 260.58 feet to the point and place of beginning.

NOTE: Parcel A-2 contains 0.9586 acre (41,757 Sq.Ft.), more or less.

PARCEL "B-1" DESCRIPTION

A certain tract of land situate within the southwest one-quarter of Section 15, Township 10 North, Range 3 East, New Mexico Principal Meridian, in the City of Albuquerque, Bernalillo County, New Mexico. Said tract includes a westerly portion of vacated Stanford Drive and being more particularly described by New Mexico State Plane Grid Bearings (NAD 27, Central Zone) and ground distances as follows:

BEGINNING at the southwest corner of the tract herein described, being a point on curve on the northerly right-of-way line of Lomas Boulevard N.E., whence the City of Albuquerque survey monument "9-J16", having New Mexico State Plane Grid coordinates X=389,674.32; Y=1,487,263.26 bears S75°09'21"W a distance of 231.47 feet; thence along the westerly boundary line of the tract herein described,
N00°05'46"E a distance of 431.75 feet to the northwest corner of the tract herein described, thence along the northerly boundary line of the tract herein described and partially along the face of the south wall of a hallway,
S89°37'31"E a distance of 310.30 feet to the northeast corner of the tract herein described, thence along the easterly boundary line of the tract herein described,
S00°16'40"E a distance of 267.57 feet; thence,
N89°51'34"W a distance of 86.05 feet; thence,
N45°00'00"W a distance of 11.68 feet; thence,
N00°05'56"E a distance of 12.06 feet; thence,
N89°31'34"W a distance of 97.04 feet; thence,
S00°05'46"W a distance of 195.82 feet to a point on curve on the said northerly right-of-way line of Lomas Blvd. N.E.; thence along the said right-of-way line,
120.60 feet along the arc of a curve to the right having a radius of 1223.33 feet and a chord bearing N84°28'24"W a distance of 128.54 feet to the point and place of beginning.

NOTE: Parcel B-1 contains 2.4186 acres (105,354 Sq.Ft.), more or less.

PARCEL "B-2" DESCRIPTION

A certain tract of land situate within the southwest one-quarter of Section 15, Township 10 North, Range 3 East, New Mexico Principal Meridian, in the City of Albuquerque, Bernalillo County, New Mexico. Said tract includes a easterly portion of vacated Stanford Drive and being more particularly described by New Mexico State Plane Grid Bearings (NAD 27, Central Zone) and ground distances as follows:

BEGINNING at the southeast corner of the tract herein described, being a point on the northerly right-of-way line of Lomas Boulevard N.E., whence the City of Albuquerque survey monument "9-J16", having New Mexico State Plane Grid coordinates X=389,674.32; Y=1,487,263.26 bears S85°15'25"W a distance of 546.87 feet; thence along said northerly right-of-way line,
N89°47'18"W a distance of 144.14 feet to a point of curvature; thence,
49.18 feet along the arc of a chord to the right having a radius of 1223.33 feet and a chord bearing N88°38'12"W a distance of 49.18 feet to the southwest corner of the tract herein described; thence,
N00°05'46"E a distance of 195.82 feet to the northwest corner of the tract herein described; thence along the northerly boundary line of the tract herein described,
S89°31'34"E a distance of 97.04 feet; thence,
S00°05'56"W a distance of 12.06 feet; thence,
S45°00'00"E a distance of 11.68 feet; thence,
S89°51'34"E a distance of 86.05 feet to the northeast corner of the tract herein described; thence,
S00°16'40"E a distance of 176.18 feet to the point and place of beginning.

NOTE: Parcel B-2 contains 0.8252 acre (35,946 Sq.Ft.), more or less.

PARCEL "B-3" DESCRIPTION

A certain tract of land situate within the southwest one-quarter of Section 15, Township 10 North, Range 3 East, New Mexico Principal Meridian, in the City of Albuquerque, Bernalillo County, New Mexico. Said tract includes a portion of vacated Stanford Drive and being more particularly described by New Mexico State Plane Grid Bearings (NAD 27, Central Zone) and ground distances as follows:

BEGINNING at the southwest corner of the tract herein described, being a point on the northerly right-of-way line of Lomas Boulevard N.E., whence the City of Albuquerque survey monument "9-J16", having New Mexico State Plane Grid coordinates X=389,674.32; Y=1,487,263.26 bears S37°44'40"E a distance of 214.77 feet; thence along the westerly boundary line of the tract herein described,
N00°00'00"E a distance of 75.67 feet; thence,
N21°40'00"W a distance of 36.34 feet; thence,
S90°00'00"E a distance of 72.95 feet; thence,
N00°00'00"E a distance of 280.54 feet to the northwest corner of the tract herein described; thence along the northerly boundary line of the tract herein described,
N90°00'00"E a distance of 71.60 feet to a point of curvature; thence,
66.31 feet along the arc of a curve to the right having a radius of 82.13 feet and a chord bearing S80°52'21"E a distance of 64.52 feet to a point (non-tangent); thence,
S90°00'00"E a distance of 33.74 feet; thence,
S00°00'00"E a distance of 42.56 feet; thence,
S89°37'31"E a distance of 131.74 feet to the northeast corner of the tract herein described; thence along the easterly boundary line of the tract herein described,
S00°05'46"W a distance of 431.75 feet to a point on the said northerly right-of-way line of Lomas Blvd. and the southeast corner of the tract herein described; thence along said right-of-way line,
373.46 feet along the arc of a curve to the right having a radius of 1223.33 feet and a chord bearing N72°42'58"W a distance of 372.01 feet to the point and place of beginning.

NOTE: Parcel B-3 contains 3.1015 acres (135,101 Sq.Ft.), more or less.

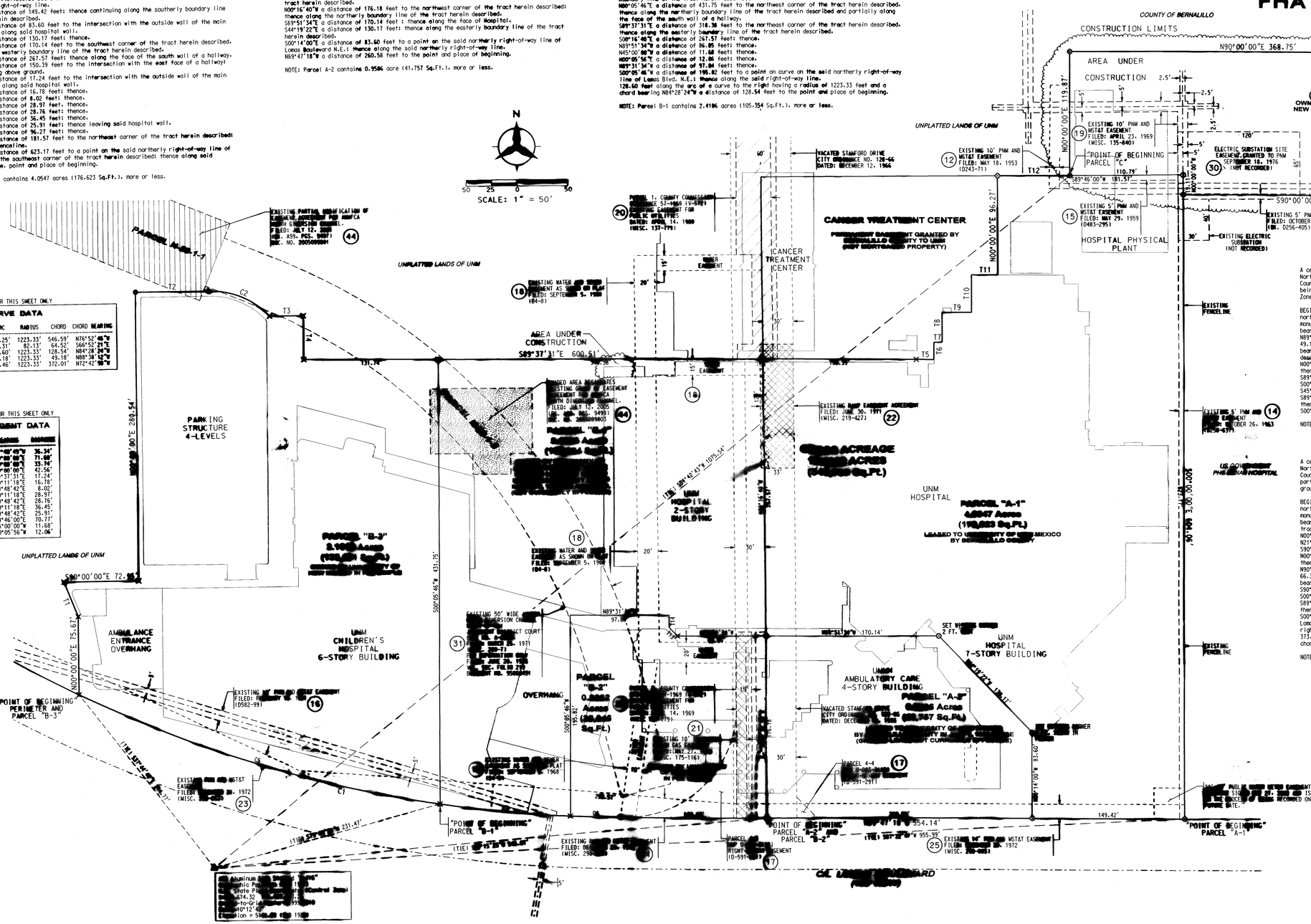
N
SCALE: 1" = 50'
COUNTY OF BERNALILLO
CONSTRUCTION LIMITS
N90°00'00"E 368.75'
AREA UNDER CONSTRUCTION
PARCEL "C"
1.1246 Acres
(48,988 Sq.Ft.)
OWNED BY UNIVERSITY OF NEW MEXICO IN FEE SIMPLE
"POINT OF BEGINNING" PARCEL "C"
S89°46'00"W 181.57'
S90°00'00"W 257.96'
S00°00'00"E 138.52'
N00°00'00"E 119.87'
EXISTING 10' PNM AND NGTAT EASEMENT FILED: MAY 18, 1953 (D243-711)
EXISTING 10' PNM AND NGTAT EASEMENT FILED: APRIL 23, 1969 (MISC. 135-840)
ELECTRIC SUBSTATION SITE EASEMENT GRANTED TO PNM SEPTEMBER 18, 1976 (NOT RECORDED)
EXISTING 5' PNM AND NGTAT EASEMENT FILED: MAY 29, 1959 (D483-295)
EXISTING 5' PNM AND NGTAT EASEMENT FILED: OCTOBER 26, 1953 (BK. D256-405)
EXISTING ELECTRIC SUBSTATION (NOT RECORDED)
HOSPITAL PHYSICAL PLANT
CONSTRUCTION LIMITS
UNPLATTED LANDS OF UNM
VACATED STANFORD DRIVE CITY ORDINANCE NO. 120-66 DATED: DECEMBER 12, 1966
CANCER TREATMENT CENTER
PERMANENT EASEMENT GRANTED BY BERNALILLO COUNTY TO UNM (NOT MORTGAGED PROPERTY)
EXISTING FENCELINE
EXISTING 5' PNM AND NGTAT EASEMENT FILED: OCTOBER 26, 1963
US GOVERNMENT PHS HOSPITAL
AREA UNDER CONSTRUCTION S89°37'31"E 600.51'
PARKING STRUCTURE 4-LEVELS
N00°00'00"E 280.54'
PARCEL "B-3" 3.1015 Acres
UNPLATTED LANDS OF UNM
S90°00'00"E 72.95'
AMBULANCE ENTRANCE OVERHANG
UNM CHILDREN'S HOSPITAL 6-STORY BUILDING
"POINT OF BEGINNING" PERIMETER AND PARCEL "B-3"
S00°05'46"W 431.75'
PARCEL "B-2" 0.8252 Acres (35,946 Sq.Ft.)
OVERHANG
S00°05'46"W 195.82'
UNM HOSPITAL 2-STORY BUILDING
UNM HOSPITAL
PARCEL "A-1" 4.0547 Acres (176,623 Sq.Ft.)
LEASED TO UNIVERSITY OF NEW MEXICO BY BERNALILLO COUNTY
UNM HOSPITAL 7-STORY BUILDING
UNM AMBULATORY CARE 4-STORY BUILDING
PARCEL "A-2" 0.9586 Acres (41,757 Sq.Ft.)
N00°14'00"W 83.60'
149.42'
"POINT OF BEGINNING" PARCEL "B-1"
"POINT OF BEGINNING" PARCEL "B-2"
"POINT OF BEGINNING" PARCEL "A-1"
N89°47'18"W 554.14'
S87°22'47"W 955.99'
EXISTING 10' PNM AND NGTAT EASEMENT FILED: OCTOBER 26, 1972 (MISC. 203-051)
EXISTING 10' PNM AND NGTAT EASEMENT FILED: OCTOBER 26, 1972 (MISC. 203-051)
EXISTING 10' PNM AND NGTAT EASEMENT FILED: OCTOBER 26, 1972 (MISC. 203-051)
EXISTING 50' WIDE DRAINAGE EASEMENT
EXISTING WATER AND SEWER EASEMENT AS SHOWN ON PLAT FILED: SEPTEMBER 5, 1968 (D4-81)
EXISTING WATER AND SEWER EASEMENT AS SHOWN ON PLAT FILED: SEPTEMBER 5, 1968 (D4-81)
EXISTING PARTIAL MODIFICATION OF EASEMENT AGREEMENT FOR ARROYO DRAINAGE CHANNEL. FILED: JULY 12, 2005 (BK. A99, PGS. 9491) (DOC. NO. 2005099403)
EXISTING RAMP EASEMENT AGREEMENT FILED: JUNE 30, 1971 (MISC. 219-427)
EXISTING 15' PNM AND NGTAT EASEMENT FILED: OCTOBER 26, 1972 (MISC. 203-051)
EXISTING 10' PNM AND NGTAT EASEMENT FILED: MAY 29

ALTA/ACSM LAND TITLE SURVEY
UNIVERSITY OF NEW MEXICO HOSPITAL

ALBUQUERQUE, NEW MEXICO
JUNE, 2008

FHA Project No. 116-13002

LEGEND

- ALTA/ACSM BOUNDARY LINE
- EXISTING TRACT LINE
- CENTERLINE
- EXISTING EASEMENT LINE
- ADJOINING PROPERTY LINE
- EXISTING BUILDING OUTLINE
- SEE SHEET 2 OF 7 FOR PROPERTY CORNER INFORMATION.

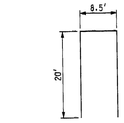

714 STANDARD PARKING SPACES

STANDARD PARKING SPACE
(TYPICAL)
N.T.S.

50 25 0 50
SCALE: 1" = 50'

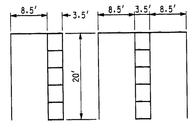

82 HANDICAP PARKING SPACES

HANDICAP PARKING SPACES
(TYPICAL)
N.T.S.

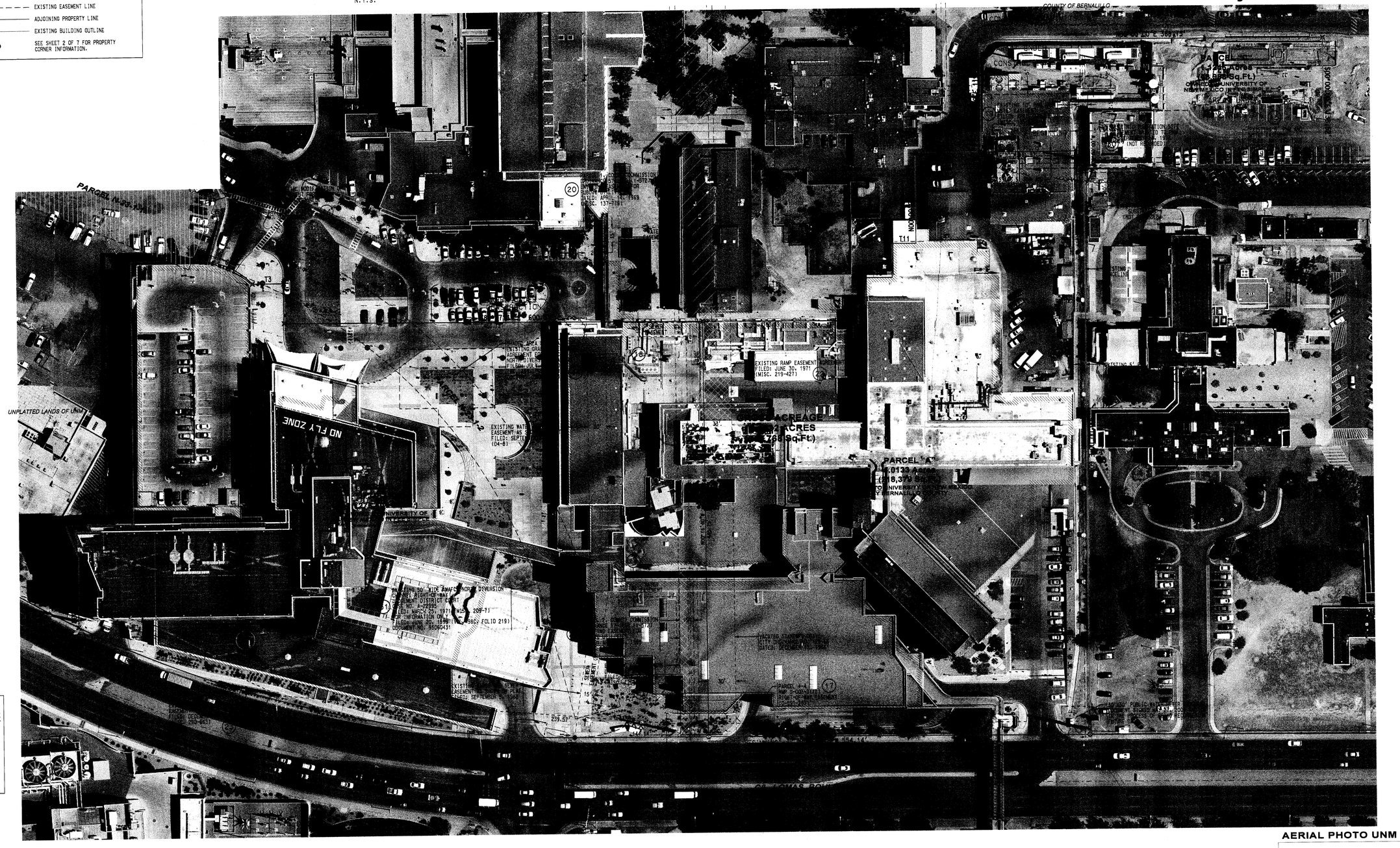

TABLE FOR THIS SHEET ONLY

TANGENT DATA

ID	BEARING	DISTANCE
T1	N21°40'49"W	36.34'
T2	N90°00'00"E	71.60'
T3	S90°00'00"E	33.74'
T4	S00°00'00"E	42.56'
T5	S89°37'31"E	17.24'
T6	N00°11'18"E	16.78'
T7	S89°48'42"E	8.02'
T8	N00°11'18"E	28.97'
T9	S89°48'42"E	28.76'
T10	N00°11'18"E	36.45'
T11	S89°48'42"E	25.91'
T12	N89°46'00"E	70.77'

TABLE FOR THIS SHEET ONLY

CURVE DATA

ID	DELTA	TANGENT	ARC	RADIUS	CHORD	CHORD BEARING
C1	25°49'05"	280.38'	551.25'	1223.33'	546.59'	N76°52'46"W
C2	46°15'18"	35.08'	66.31'	82.13'	64.52'	S66°52'21"E

ALAN R. BENHAM
NEW MEXICO
15700
LICENSED PROFESSIONAL SURVEYOR

AERIAL PHOTO UNM HOSPITAL SITE

Bohannan ▲ Huston
Courtyard I 7500 Jefferson St. NE Albuquerque, NM 87109-4335
ENGINEERING ▲ SPATIAL DATA ▲ ADVANCED TECHNOLOGIES

© 2008, BOHANNAN HUSTON, INC.

P:\080177\SURVEY\GRAPHICS\2008 Update\Final Alta\080177001ALTA04.dgn
JOB NO. 080177.001
21-AUG-2008 -
10:54
dyoboey

ALTA/ACSM LAND TITLE SURVEY
UNIVERSITY OF NEW MEXICO HOSPITAL

ALBUQUERQUE, NEW MEXICO
JUNE, 2008

FHA Project No. 116-13002

UTILITY NOTE:
SEE NOTE NO.10, SHEET 1 OF 7, FOR INFORMATION REGARDING THE LOCATION OF UTILITIES.

N

50 25 0 50
SCALE: 1" = 50'

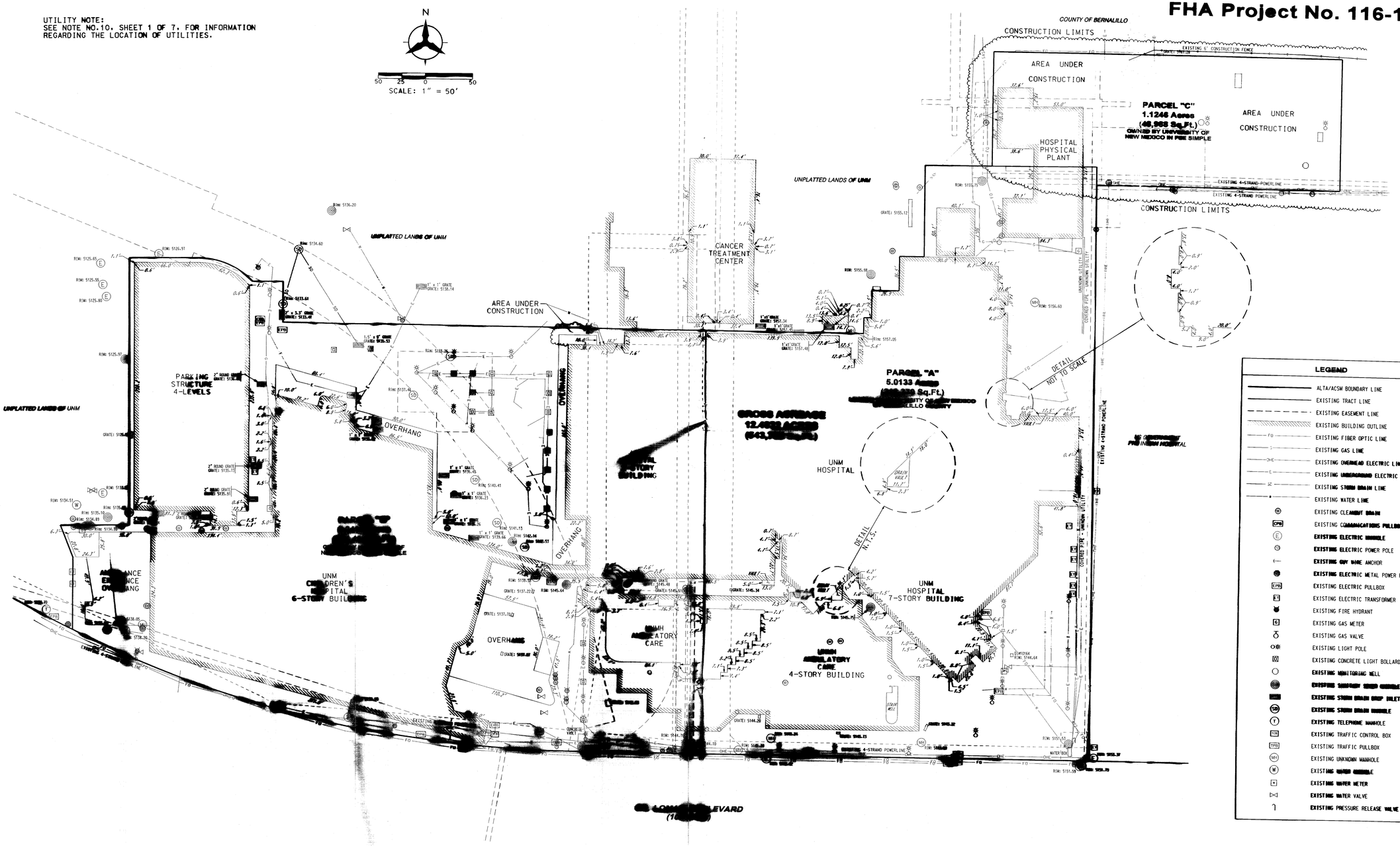

LEGEND

- ALTA/ACSM BOUNDARY LINE
- EXISTING TRACT LINE
- EXISTING EASEMENT LINE
- EXISTING BUILDING OUTLINE
- EXISTING FIBER OPTIC LINE
- EXISTING GAS LINE
- EXISTING OVERHEAD ELECTRIC LINE
- EXISTING UNDERGROUND ELECTRIC LINE
- EXISTING STORM DRAIN LINE
- EXISTING WATER LINE
- EXISTING CLEANOUT DRAIN
- EXISTING COMMUNICATIONS PULLBOX
- EXISTING ELECTRIC MANHOLE
- EXISTING ELECTRIC POWER POLE
- EXISTING GUY WIRE ANCHOR
- EXISTING ELECTRIC METAL POWER POLE
- EXISTING ELECTRIC PULLBOX
- EXISTING ELECTRIC TRANSFORMER
- EXISTING FIRE HYDRANT
- EXISTING GAS METER
- EXISTING GAS VALVE
- EXISTING LIGHT POLE
- EXISTING CONCRETE LIGHT BOLLARDS
- EXISTING MONITORING WELL
- EXISTING SANITARY SEWER MANHOLE
- EXISTING STORM DRAIN DROP INLET
- EXISTING STORM DRAIN MANHOLE
- EXISTING TELEPHONE MANHOLE
- EXISTING TRAFFIC CONTROL BOX
- EXISTING TRAFFIC PULLBOX
- EXISTING UNKNOWN MANHOLE
- EXISTING WATER MANHOLE
- EXISTING WATER METER
- EXISTING WATER VALVE
- EXISTING PRESSURE RELEASE VALVE

06/19/2008
LICENSED PROFESSIONAL SURVEYOR

© 2008, DOHANNAN HUSTON, INC.

SHEET 5 OF 7

UTILITIES OF TRACT I, PARCELS B & C, AND TRACT II, PARCEL A

Dohannan ▲ Huston.
Courtyard I 7500 Jefferson St. NE Albuquerque, NM 87109-4335
ENGINEERING ▲ SPATIAL DATA ▲ ADVANCED TECHNOLOGIES

P:\080177\SURVEY\GRAPHICS\2008 Update\Final Alta\080177001ALT405.dgn JOB NO. 080177 001
23-JUL-2008 10:52
dydony

ALTA/ACSM LAND TITLE SURVEY

OUTPATIENT SURGICAL and IMAGING SERVICES FACILITY UNIVERSITY OF NEW MEXICO HOSPITAL

ALBUQUERQUE, NEW MEXICO
JUNE, 2008

FHA Project No. 116-13002

NOTES

1. This ALTA/ACSM Land Title Survey was prepared with documents included in the Commitment for Title Insurance, prepared by LandAmerica Albuquerque Title, File No. 237186SD, Effective Date: May 6, 2008, 8:00am.
2. Lands occupied by the University of New Mexico, a state educational institution, which includes lands occupied by the University of New Mexico Hospital, are not subject to the City of Albuquerque zoning regulations.
3. All tracts appear to be located in Flood Zone "X", area of minimal flooding, per FIRM Map Number 35001C0353E and Map Number 35001C0332E, Revised November 19, 2003. The surveyor makes no guarantees as to the accuracy of the FIRM Map data - The Local FEMA Agent should be contacted for verification.
4. The gross acreage of all combined tracts is 16.4255 acres (715,495 Sq.Ft.).
5. Distances are ground distances and bearings are New Mexico State Plane Grid Bearings (Central Zone, NAD 27). Basis of bearing is S60°55'46"E, a distance of 3491.24', between "9-J15" and "9-J16".
6. This ALTA document is not subdivisions of lands as defined by NMSA 47-6-2.
7. Fieldwork performed utilized both RTK GPS and Total methodology.
8. Said tracts are located in Zone Atlas Index Map No. J-15 and J-16.
9. The OSIS site and Parcel C are currently under construction. Utility and site data shown is correct as of May 26th, 2008. Ongoing site construction and site modifications may render said data void.
10. Utilities shown were collected based on visible evidence and utility designations provided by ABASTO Utility Locating Co.. Designations were made between May 21st and May 20th 2008. Data relied upon for utility mapping was provided by others - no guarantee can be made to the completeness of said designated utilities. Where shown, it appears that a public utility encroaches outside of an easement or is not contained within an easement - it is unknown whether those utilities outside existing easements are encroaching or are private facilities owned by the University of New Mexico and therefore do not need an express easement.
11. All property corners were found or set during the course of this survey. Those located in construction zones may be destroyed. Those corners located on the face of a building were not set.
12. Known utilities serving the subject property, as shown herein, enter and exit the subject property through public rights of way or through easements specifically dedicated for each utility's use as declared by the title commitment and utility designation provided by ABASTO Utility Locating. Locations where public utilities enter UNM land may not be reflected herein due to the fact that Parcels A, B, and C are lease parcels of a greater unplatted tract and the OSIS Site is a lease parcel of a greater fee tract, outside the scope of this survey.
13. This ALTA document is prepared for the sole use in closing proceedings pursuant to FHA Project No. 116-13002 circa June/July 2008.

TITLE NOTES CORRESPONDING TO SCHEDULE B - SECTION II

T32. The tracts hereon are subject to an easement granted to Public Service Company of New Mexico, a New Mexico corporation by instrument recorded February 12, 1960 in Book D 527, page 23 as Document No. 57021, records of Bernalillo County, New Mexico and as set forth on the 2004 Survey, as to OSIS Parcel of Tract I. (Plotted Herein)

T33. City of Albuquerque Vacation Action 06-DRB-00730 (DRB #10049133) pertains to the following: An easement granted to Public Service Company of New Mexico, a New Mexico corporation and Mountain States Telephone and Telegraph Company, a Colorado corporation by instrument recorded May 26, 1967 in Book Misc. 69, page 137 as Document No. 51041 and as shown on the plat recorded in Plat Book C15, page 149, records of Bernalillo County, New Mexico and as set forth on the 2004 Survey. (Plotted Herein)

T34. City of Albuquerque Vacation Action 06-DRB-00730 (DRB #10049133) pertains to the following: An easement granted to Public Service Company of New Mexico, a New Mexico corporation and Mountain States Telephone and Telegraph Company, a Colorado corporation by instrument recorded June 5, 1967 in Book Misc. 69, page 845 as Document No. 51885, records of Bernalillo County, New Mexico and as set forth on the 2004 Survey. (Plotted Herein)

T35. The tracts hereon are subject to a Right of Way Easement granted to The Mountain States Telephone and Telegraph Company, a Colorado corporation by instrument recorded March 16, 1971 in Book Misc. 208, page 73 as Document No. 16473, records of Bernalillo County, New Mexico and as set forth on the 2004 Survey. Encroachment of asphalt, curbing, concrete and landscaping onto said easement as set forth on the 2004 Survey, as to OSIS Parcel of Tract I. (Plotted Herein)

T36. The tracts hereon are subject to a Right of Way Easement granted to The Mountain States Telephone and Telegraph Company, a Colorado corporation by instrument recorded March 16, 1971 in Book Misc. 208, page 75 as Document No. 16474, records of Bernalillo County, New Mexico and as set forth on the 2004 Survey. Encroachment of asphalt, curbing, concrete and landscaping onto said easement as set forth on the 2004 Survey, as to OSIS Parcel of Tract I. (Plotted Herein)

T37. The tracts hereon are subject to an easement granted to the City of Albuquerque, a New Mexico municipal corporation by instrument recorded September 9, 2002 in Book A41, page 3540 as Document No. 2002113867 and rerecorded September 11, 2002 in Book A41, page 4648 as Document No. 2002114976, records of Bernalillo County, New Mexico as set forth on the 2004 Survey. Encroachment of asphalt, curbing, landscaping, buildings and concrete onto said easement as set forth on the 2004 Survey, as to OSIS Parcel of Tract I. (Plotted Herein)

T38. The tracts hereon are subject to an Agreement to Construct Public Improvements by City Contract recorded in Book A84, page 5557 as document number 2004135934, records of Bernalillo County, New Mexico, as to OSIS Parcel of Tract I. (Not Plottable)

T39. The tracts hereon are subject to an easement to the City of Albuquerque recorded in Book A84, page 5559 as document number 2004135936, records of Bernalillo County, New Mexico. Encroachment of asphalt and concrete curbing onto said easement as set forth on the 2004 Survey, as to OSIS Parcel of Tract I. (Plotted Herein)

T40. The tracts hereon are subject to a Mortgage dated November 18, 2004 from Regents of the University of New Mexico, a state educational institution and body corporate under the laws of the State of New Mexico, to Wells Fargo Bank, National Association, recorded in Book A86, page 9814 as document number 2004468519, records of Bernalillo County, New Mexico in the principal sum of $183,399,000.00, as amended by that certain Closing Document Amendment recorded in Book A94, page 2171 as document number 2006062306, records of Bernalillo County, New Mexico. (Blanket in Nature)

T41. The tracts hereon are subject to a Mortgage dated [illegible] from Regents of the University of New Mexico, a state educational institution and body corporate under the laws of the State of New Mexico, to [illegible] recorded in Book A86, page 9875 as document number [illegible]. (Blanket in Nature)

T42. The tracts hereon are subject to a UCC Financing Statement recorded in Book A86, page 9876 as document number 2004160321, records of Bernalillo County, New Mexico. (Blanket in Nature)

T43. The tracts hereon are subject to easements as set forth on the plat recorded in Map Book 2007C, page 166, records of Bernalillo County, New Mexico. (Plotted Herein by Nature of other listed exceptions. No new easements on this document affect said parcel)

T45. The Declaration of Private Access Easement recorded June 19, 2007 as document number 2007089425, records of Bernalillo County, New Mexico is not located within the bounds parcel of this survey. (Not Plotted Herein)

T46. A Subdivision Improvements Agreement was recorded June 19, 2007 as document number 2007089426, records of Bernalillo County, New Mexico pertaining to said tracts. (Blanket in Nature)

T47. A Subdivision Improvements Agreement was recorded June 19, 2007 as document number 2007089428, records of Bernalillo County, New Mexico pertaining to said tracts. (Blanket in Nature)

NOTE
Circled numbers refer to the items in Schedule B, Part II of the Preforma prepared by LandAmerica Albuquerque Title

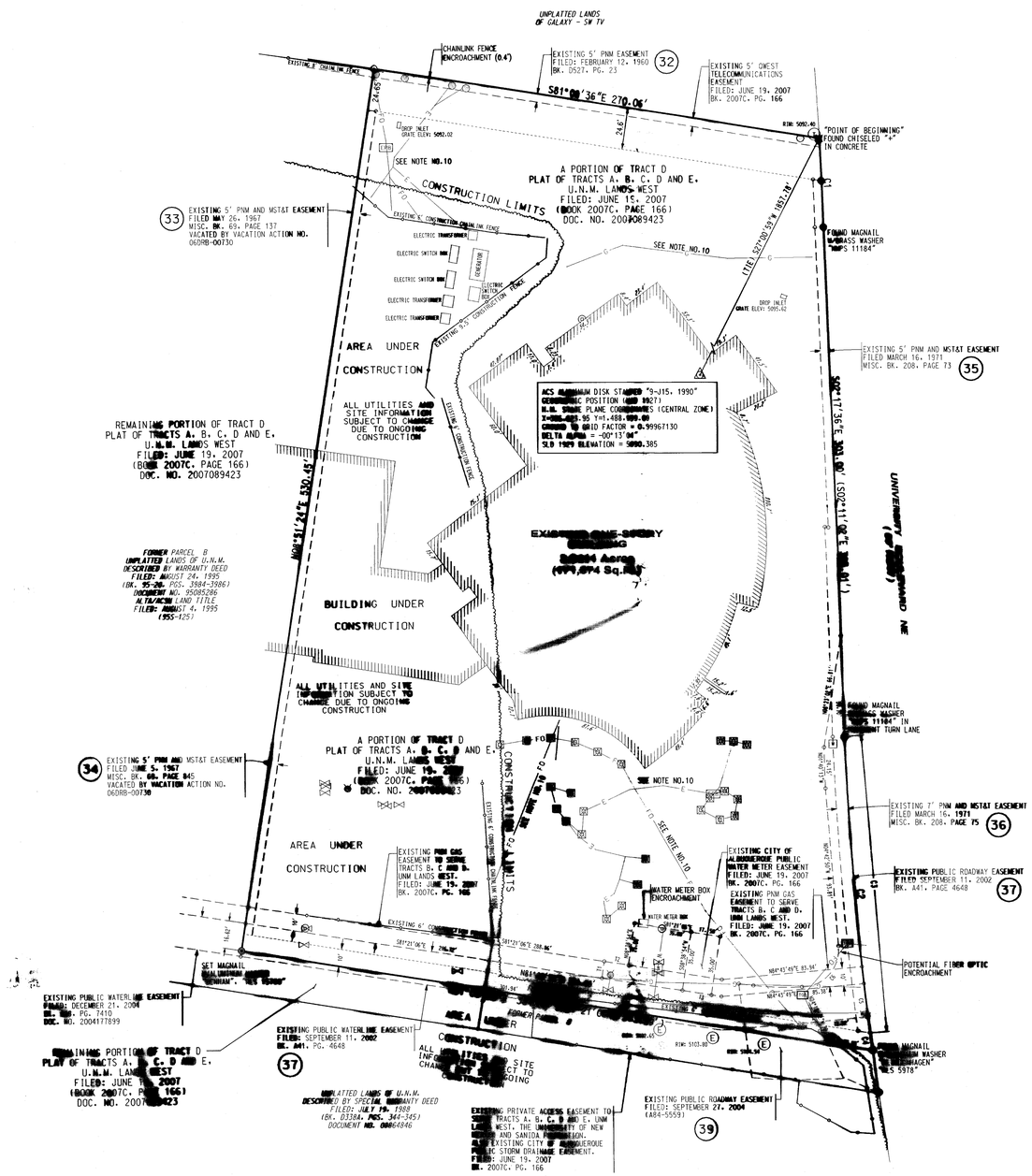

FORMER PARCEL B UNPLATTED LANDS OF U.N.M. DESCRIBED BY WARRANTY DEED FILED: AUGUST 24, 1995 (BK. 95-26, PGS. 3984-3986) DOCUMENT NO. 95085286 ALTA/ACSM LAND TITLE FILED: AUGUST 4, 1995 (955-125)

TABLE FOR THIS SHEET ONLY

CURVE DATA

ID	DELTA	TANGENT	ARC	RADIUS	CHORD	CHORD BEARING
C1	03°03'51"	26.48'	52.95'	1065.06'	52.95'	S02°35'37"E
C2	05°36'17"	53.48'	106.82'	1909.86'	106.75'	S05°02'40"E
				(1949.93')		
C3	05°17'28"	88.25'	176.37'	1909.86'	176.31'	S04°53'17"E
	(05°09'29")		(175.54')	(1949.93')	(175.48')	(S04°55'44"E)
C4	00°18'49"	5.22'	10.43'	1909.86'	10.43'	S07°41'25"E
	(00°18'22")		(10.42')	(1949.93')	(10.42')	(S07°39'40"E)
C5	00°36'03"	10.01'	20.03'	1909.86'	20.03'	S06°56'41"E
	(00°35'17")		(20.01')	(1949.93')	(20.01')	(S06°55'53"E)
C6	95°37'04"	24.27'	36.71'	22.00'	32.60'	N42°06'02"E
	(95°37'43")		(36.72')	(22.00')	(32.60')	(N43°06'02"E)

TABLE FOR THIS SHEET ONLY

TANGENT DATA

ID	BEARING	DISTANCE
T1	N08°08'54"E	10.00'
T2	S81°21'06"E	15.00'
T3	S81°21'06"E	23.49'

SCALE: 1" = 40'

LEGEND

- ALTA/ACSM BOUNDARY LINE
- EXISTING LOT LINE
- EXISTING EASEMENT LINE
- LOT LINE ELIMINATED BY PLAT OF TRACTS A, B, C, D AND E, U.N.M. LANDS WEST. FILED: JUNE 19, 2007. BOOK 2007C, PAGE 166. DOC. NO. 2007089423.
- ADJOINING PROPERTY LINE
- EXISTING FENCE LINE
- EXISTING CHAINLINK FENCE
- EXISTING FIBER OPTIC LINE
- EXISTING GAS LINE
- EXISTING UNDERGROUND ELECTRIC LINE
- EXISTING WATER LINE
- FOUND 5/8" REBAR WITH 1-1/4" DIA. RED PLASTIC SURVEY CAP STAMPED "LS 5978"
- FOUND PKNAIL W/1-1/2" DIA. ALUMINUM WASHER STAMPED "KLINGENMAIER", "NLS 5978"
- FOUND MAGNAIL WITH WASHER AS NOTED
- FOUND CHISELED "+" IN CONCRETE
- EXISTING CLEAN OUT DRAIN
- EXISTING ELECTRIC PULLBOX
- EXISTING CONCRETE LIGHT BOLLARD
- EXISTING FIRE HYDRANT
- EXISTING POWER POLE
- EXISTING TELEPHONE MANHOLE
- EXISTING TRAFFIC CONTROL BOX
- EXISTING WATER METER
- EXISTING WATER VALVE

LOCATION OF TRACT I, OSIS PARCEL, SITE

Bohannan ▲ Huston
Courtyard I 7500 Jefferson St. NE Albuquerque, NM 87109-4335
ENGINEERING ▲ SPATIAL DATA ▲ ADVANCED TECHNOLOGIES

© 2008, BOHANNAN HUSTON, INC.

P:\080177\SURVEY\GRAPHICS\2008 Update\Final Alta\080177001ALTA06.dgn 21-AUG-2008 10:53 dyoberry
JOB NO. 080177 001

ALTA/ACSM LAND TITLE SURVEY

OUTPATIENT SURGICAL and IMAGING SERVICES FACILITY UNIVERSITY OF NEW MEXICO HOSPITAL

ALBUQUERQUE, NEW MEXICO
JUNE, 2008

FHA Project No. 116-13002

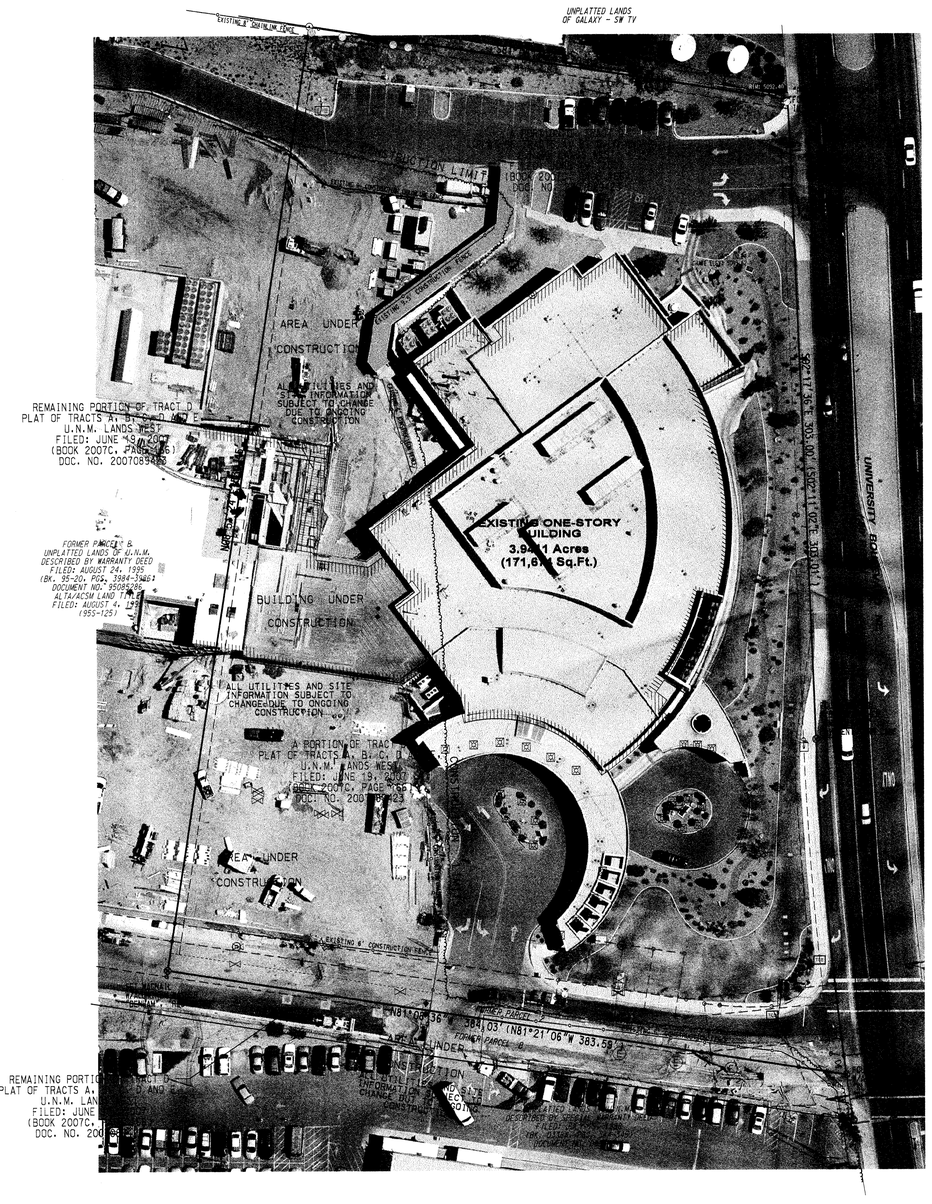

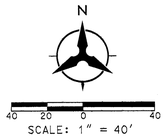

TABLE FOR THIS SHEET ONLY

CURVE DATA

ID	DELTA	TANGENT	ARC	RADIUS	CHORD	CHORD BEARING
C1	03°03'51"	26.48'	52.95'	1869.86'	52.95'	S02°35'37"E
C2	05°36'17"	93.48'	186.82'	1909.86'	186.75'	S05°02'40"E
				(1949.93')		
C3	05°17'28"	88.25'	176.37'	1909.86'	176.31'	S04°53'17"E
	(05°09'25")		(175.54')	(1949.93')	(175.48')	(S04°55'44"E)
C4	00°18'49"	5.22'	10.43'	1909.86'	10.43'	S07°41'25"E
	(00°18'22")		(10.42')	(1949.93')	(10.42')	(S07°39'40"E)
C5	00°36'03"	10.01'	20.03'	1909.86'	20.03'	S06°56'41"E
	(00°35'17")		(20.01')	(1949.93')	(20.01')	(S06°55'53"E)
C6	95°37'04"	24.27'	36.71'	22.00'	32.60'	N42°06'02"E
	(95°37'43")		(36.72')	(22.00')	(32.60')	(N43°06'02"E)

TABLE FOR THIS SHEET ONLY

TANGENT DATA

ID	BEARING	DISTANCE
T1	N08°08'54"E	10.00'
T2	S81°21'06"E	15.00'
T3	S81°21'06"E	23.49'

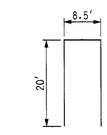

105 STANDARD PARKING SPACES

STANDARD PARKING SPACE
(TYPICAL)
N.T.S.

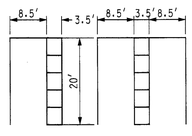

12 HANDICAP PARKING SPACES

HANDICAP PARKING SPACES
(TYPICAL)
N.T.S.

LEGEND

- ALTA/ACSM BOUNDARY LINE
- EXISTING LOT LINE
- EXISTING EASEMENT LINE
- LOT LINE ELIMINATED BY PLAT OF TRACTS A, B, C, D AND E, U.N.M. LANDS WEST, FILED: JUNE 19, 2007, BOOK 2007C, PAGE 166, DOC. NO. 2007089423.
- ADJOINING PROPERTY LINE
- EXISTING FENCE LINE
- EXISTING CHAINLINK FENCE
- EXISTING FIBER OPTIC LINE
- EXISTING GAS LINE
- EXISTING UNDERGROUND ELECTRIC LINE
- EXISTING WATER LINE
- FOUND 5/8" REBAR WITH 1-1/4" DIA. RED PLASTIC SURVEY CAP STAMPED "LS 5978"
- FOUND PKNAIL W/1-1/2" DIA. ALUMINUM WASHER STAMPED "KLINGENHAGEN", "RLS 5978"
- FOUND MAGNAIL W/BRASS WASHER AS NOTED
- FOUND CHISELED "+" IN CONCRETE
- EXISTING CLEAN OUT DRAIN
- EXISTING ELECTRIC PULLBOX
- EXISTING CONCRETE LIGHT BOLLARD
- EXISTING FIRE HYDRANT
- EXISTING POWER POLE
- EXISTING TELEPHONE MANHOLE
- EXISTING TRAFFIC CONTROL BOX
- EXISTING WATER METER
- EXISTING WATER VALVE

ALAN R. BENHAM
NEW MEXICO
15700
06/19/08
PROFESSIONAL SURVEYOR

© 2008, BOHANNAN HUSTON, INC.

SHEET 7 OF 7

AERIAL PHOTO OSIS SITE

Bohannan ▲ Huston
Courtyard I 7500 Jefferson St. NE Albuquerque, NM 87109-4335
ENGINEERING ▲ SPATIAL DATA ▲ ADVANCED TECHNOLOGIES

P:\080177\SURVEY\GRAPHICS\2008 Update\Final Alta\080177001ALTA07.dgwOB NO. 080177 001
21-AUG-2008
10:58
dysbany

ALTA/NSPS LAND TITLE SURVEY

HUD - U.N.M. HOSPITAL

PORTION OF SW 1/4

SECTION 15
TOWNSHIP 10 N, RANGE 3 E
CITY OF ALBUQUERQUE
BERNALILLO COUNTY, NEW MEXICO
OCTOBER 2020

FHA PROJECT NO. 116-13002
FHA PROJECT NO._____

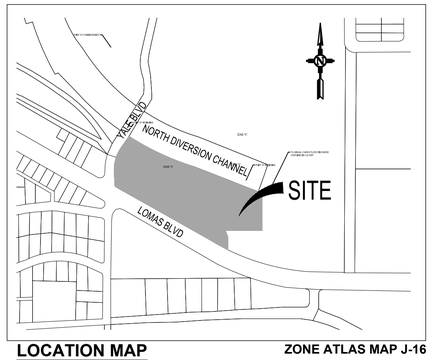

LOCATION MAP
NOT TO SCALE

ZONE ATLAS MAP J-16

LEGEND

- TO BE SET PLASTIC CAP STAMPED " PHILLIPS 5517"
- SET CHISELED MARK IN CONCRETE
- FOUND 5/8 " REBAR
- FOUND BRASS CAP AS NOTED
- CALCULATED CORNER
- SUBJECT PROPERTY LINE
- ADJOINING PROPERTY LINE
- EXISTING EASEMENT LINE
- EXISTING RIGHT-OF-WAY LINE
- PUBLIC DRAINAGE EASEMENT (P.D.E.)
- FLOOD ZONE (FEMA)

CURVE DATA

ID	DELTA	ARC	RADIUS	TANGENT	CHORD BRG	CHORD
C1	46°18'25" RT	66.38'	82.13'	35.12'	S66°50'58"E	64.59'
C2	03°40'48" RT	78.57'	1223.33'	39.30'	N62°04'40"W	78.56'
C3	29°31'49" RT	18.04'	35.00'	9.22'	N14°30'39"W	17.84'
C4	13°36'47" RT	71.14'	299.40'	35.74'	N07°00'22"E	70.97'
C5	07°02'50" LT	145.89'	1198.10'	73.03'	S80°48'36"E	145.79'
C6	03°15'00" LT	132.28'	2331.99'	66.16'	S66°30'01"E	132.26'

TANGENT DATA

ID	BEARING	DISTANCE
T1	N90°00'00"E	30.95'
T2	N90°00'00"W	40.64'
T3	S21°40'49"E	36.34'
T4	N00°11'58"E	32.91'

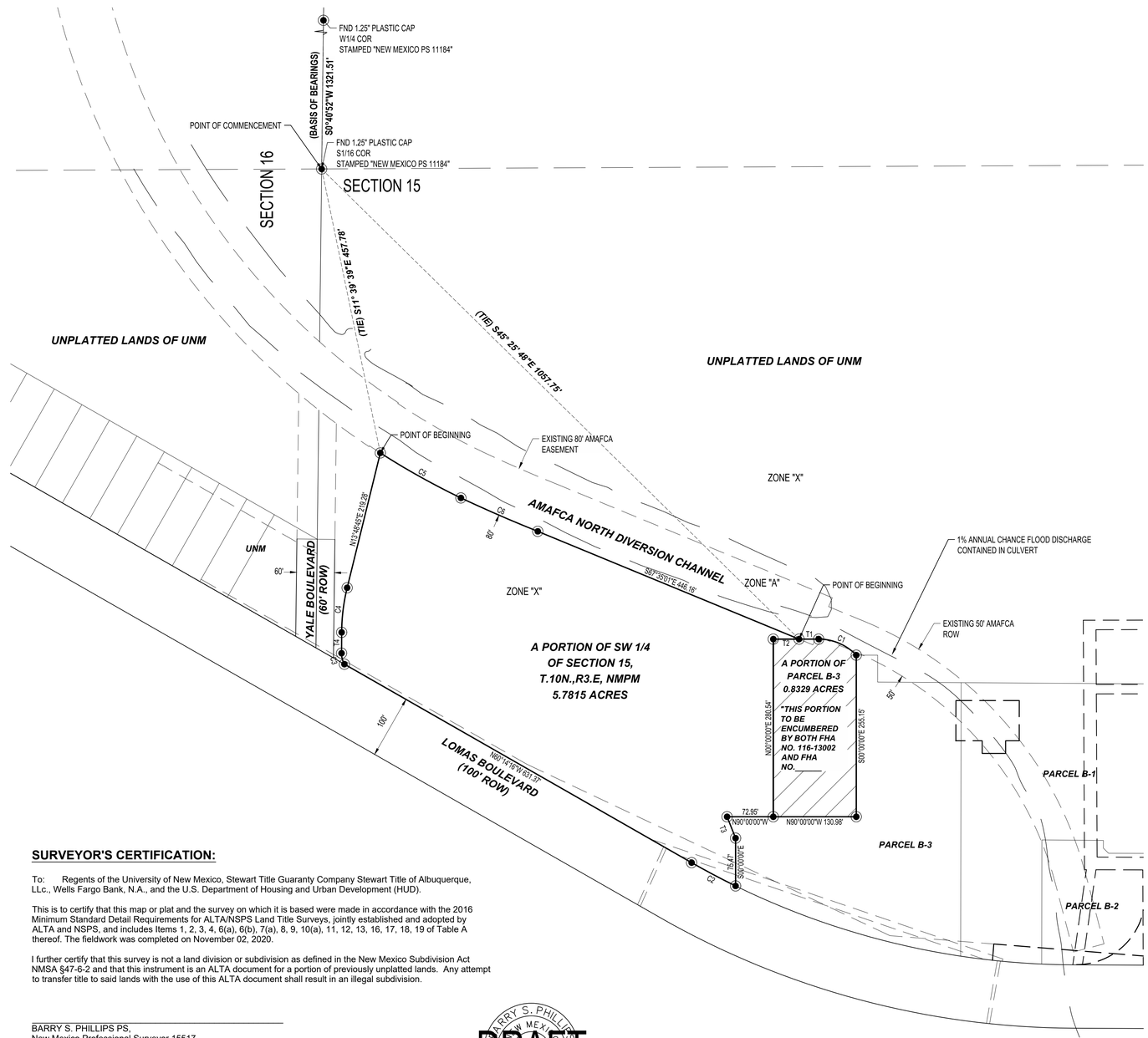

NOTES

1. Bearings are New Mexico State Plane Grid Bearings (Central Zone) NAD 1983. Basis of Bearings is between Monuments as shown hereon.
2. Distances are ground distances.
3. This ALTA/NSPS Land Title Survey was prepared with information Included in Title Commitment Issued by Stewart Title Guaranty Company, Commitment Number 671682 effective March 6, 2020.
4. Portions of site are located in Flood Zone "A", (No base flood determined), areas subject to inundation by the 1% annual chance flood. Also Zone "X" (Other flood areas) - Areas determined to be outside the 0.2% annual chance floodplane.
5. Property Address: 2211 Lomas Boulevard NE, Albuquerque, NM 87198.
6. Gross land Area: Subject Parcel 5.7815 ac. and Portion Tract B-3 0.8329 ac.
7. Zoning Information: None provided.
8. Substantial features observed in the field - As shown herein.
9. Parking spaces within the site as shown herein.
10. Utilities observed within the site - As shown herein.
11. Proposed changes in street right of way lines - No known proposed.
12. No field delineation of wetlands observed in the field.
13. This ALTA document is not a subdivision of lands as defined by NMSA §47-6-2. No new tracts or property lines are created herein.

SURVEYOR'S CERTIFICATION:

To: Regents of the University of New Mexico, Stewart Title Guaranty Company Stewart Title of Albuquerque, LLc., Wells Fargo Bank, N.A., and the U.S. Department of Housing and Urban Development (HUD).

This is to certify that this map or plat and the survey on which it is based were made in accordance with the 2016 Minimum Standard Detail Requirements for ALTA/NSPS Land Title Surveys, jointly established and adopted by ALTA and NSPS, and includes Items 1, 2, 3, 4, 6(a), 6(b), 7(a), 8, 9, 10(a), 11, 12, 13, 16, 17, 18, 19 of Table A thereof. The fieldwork was completed on November 02, 2020.

I further certify that this survey is not a land division or subdivision as defined in the New Mexico Subdivision Act NMSA §47-6-2 and that this instrument is an ALTA document for a portion of previously unplatted lands. Any attempt to transfer title to said lands with the use of this ALTA document shall result in an illegal subdivision.

_____
BARRY S. PHILLIPS PS,
New Mexico Professional Surveyor 15517
For and on behalf of
Bohannan Huston Inc.

Date: _____

BARRY S. PHILLIPS
NEW MEXICO
15517
LICENSED PROFESSIONAL SURVEYOR

DRAFT

SHEET 1 OF 3

Bohannan Huston
www.bhinc.com 800.877.5332

Tue, 19-Jan-2021 - 4:11 pm, Plotted by: RGAUNA
P:\20190398\SURVEY\02_OFFICE\01_ALTA\20190398_PLAT1.dwg

SCHEDULE B II TITLE EXCEPTIONS

1. Right or claims of parties in possession not shown by the public records. (NOT PLOTTABLE)
2. Easements or claims of easements, not shown by the public records. (NOT PLOTTABLE)
3. Encroachments, overlaps, conflicts in boundary lines, shortages in area, or other matters which would be disclosed by an accurate survey and inspection of the premises. (AS SHOWN ON SURVEY)
4. Any lien, claim or right to a lien, for services, labor or material heretofore or hereafter furnished, imposed by law and not shown by the public records. (NOT PLOTTABLE)
5. Community property, survivorship, or homestead rights, if any, of any spouse of the insured (or vestee in a leasehold or loan policy) (NOT PLOTTABLE)
6. Water rights, claims or title to water. (NOT PLOTTABLE)
7. Taxes for the year 2020, and thereafter. (NOT PLOTTABLE)
8. Defects, liens, encumbrances, adverse claims or other matters, if any, created first appearing in the public records or attaching subsequent to the Effective Date hereof but prior to the date the proposed Insured acquires for value of record the estate or interest or mortgage thereon covered by the Commitment. (NOT PLOTTABLE)
9. All matters that may be shown on an Improvement Location Report or survey of the property, if one is provided to the title company. (NOT PLOTTABLE)
10. Minerals of whatsoever kind, subsurface and surface substances, including but not limited to coal, lignite, oil, gas, uranium, clay, rock, sand and gravel in, on, under and that may be produced from the Land, together with all rights, privileges, and immunities relating thereto, whether or not appearing in the Public Records or listed in Schedule B. The Company makes no representation as to the present ownership of any such interests. There may be leases, grants, exceptions or reservations of interests that are not listed. (NOT PLOTTABLE)
11. Reservations and exceptions in the Patent by the United States of America recorded November 25,1913, in Book 50, Page 517, records of Bernalillo County, New Mexico. (NOT PLOTTABLE)
12. Reservations and exceptions in the Patent by the State of New Mexico recorded June 30, 1917 in Book B60, Page 117, records of Bernalillo County, New Mexico. (NOT PLOTTABLE)
13. Easement, and incidental purposes thereto, granted to Public Service Company of New Mexico, a New Mexico Corporation, and The Mountain States Telephone and Telegraph Company, a Colorado Corporation, recorded May 18, 1953, in Book D-243, Page 71, as Doc. No. 90238, records of Bernalillo County, New Mexico. (DOCUMENT ILLEGIBLE - DOC. NO 2015037959 (see Exception 14) INDICATES THAT THIS EASEMENT DOES NOT AFFECT SUBJECT PARCEL)
14. Easement, and incidental purposes thereto, granted to Public Service Company of New Mexico, a New Mexico Corporation, and The Mountain States Telephone and Telegraph Company, a Colorado Corporation, recorded September 30, 1953, in Book D-256, Page 405, as Doc. No. 1935, and Amended by Quitclaim Deeds recorded May 6, 2015, as Doc. No. 2015037959; as Doc. No. 2015037960, and Doc. No. 2015037961, records of Bernalillo County, New Mexico (DOES NOT AFFECT SUBJECT PARCEL)
15. Grant of Right-of-way Easement, and incidental purposes thereto, granted to Public Service Company of New Mexico, a New Mexico Corporation, and The Mountain States Telephone and Telegraph Company, a Colorado Corporation, recorded October 26, 1953, in Book D-258, Page 637, records of Bernalillo County, New Mexico. (DOES NOT AFFECT SUBJECT PARCEL)
16. Easement, and incidental purposes thereto, granted to Public Service Company of New Mexico, a New Mexico Corporation, and The Mountain States Telephone and Telegraph Company, a Colorado Corporation, recorded may 29, 1959, in Book D-483, Page 295, as Doc. No. 19615, and Amended by Quitclaim Deeds recorded May 6, 2015, as Doc. No. 2015037959, as Doc. No. 2015037960 and Doc. No. 2015037961, records of Bernalillo County, New Mexico. (DOES NOT AFFECT SUBJECT PARCEL)
17. Easement, and incidental purposes thereto, granted to Public Service Company of New Mexico, a New Mexico Corporation, and The Mountain States Telephone and Telegraph Company, a Colorado Corporation, recorded February 10, 1961, in Book D-582, Page 99, records of Bernalillo County, New Mexico. (AFFECTS SUBJECT PARCEL AS SHOWN)
18. Grant of Right of Way Easement, and incidental purposes thereto, granted to New Mexico State Highway Commission, recorded April 20, 1961, in Book D-591, Page 291, as Doc. No. 16376, records of Bernalillo County, New Mexico. (DOES NOT AFFECT SUBJECT PARCEL)
19. Easement, and incidental purposes thereto, granted to Public Service Company of New Mexico, a New Mexico Corporation, and The Mountain States Telephone and Telegraph Company, a Colorado Corporation, recorded April 23, 1969, in Book Misc. 135, Page 840, as Doc. No. 33078, and Amended by Quitclaim Deeds recorded May 6, 2015, as Doc. No. 2015037959, as Doc. No.2015037960 and Doc. No. 2015037961, records of Bernalillo County, New Mexico. (DOES NOT AFFECT SUBJECT PARCEL)
20. Easements, and incidental purposes thereto, affecting the insured premises as reserved by the City of Albuquerque for existing utilities, whether municipally owned or privately owned, which may be necessary for public use and benefit, in Vacating Ordinance No. 57-1969 adopted April 14, 1969, recorded May 14, 1969, in Book Misc. 137, Page 779, as Doc. No. 36134, as Amended by New Mexico Gas Company Quitclaim of Easement recorded May 6, 2015, as Doc. No. 2015037907, records of Bernalillo County, New Mexico. (DOES NOT AFFECT SUBJECT PARCEL)
21. Right of Way and Easement, and incidental purposes thereto, granted to Southern Union Gas Company, recorded May 27, 1970, in Book Misc. 175, Page 116, as Doc. No. 78261, as Amended by New Mexico Gas Company Quitclaim of Easement recorded May 6, 2015, as Doc. No. 2015037907, records of Bernalillo County, New Mexico. (DOES NOT AFFECT SUBJECT PARCEL)
22. Easements, and incidental purposes thereto, affecting the insured premises, as shown on the recorded plat, recorded in Plat Book D4, Page 8, records of Bernalillo County, New Mexico. (DOES NOT AFFECT SUBJECT PARCEL)
23. Easement Agreement by and between the County of Bernalillo and the United States of America recorded June 30, 1971, in Book Misc. 219, Page 427, as Doc. No. 32622, records of Bernalillo County, New Mexico. (DOES NOT AFFECT SUBJECT PARCEL)
24. Easement, and incidental purposes thereto, granted to Public Service

SCHEDULE B II TITLE EXCEPTIONS (CONT'D)

Company of New Mexico, a New Mexico Corporation, and The Mountain States Telephone and Telegraph Company, a Colorado Corporation, recorded December 20, 1972, in Book Misc. 290, Page 663, as Doc. No. 25935, records of Bernalillo County, New Mexico. (AFFECTS PARCEL AS SHOWN)

25. Easement, and incidental purposes thereto, granted to Public Service Company of New Mexico, a New Mexico Corporation, and The Mountain States Telephone and Telegraph Company, a Colorado Corporation, recorded December 20, 1972, in Book Misc. 290, Page 664, as Doc. No. 25936, records of Bernalillo County, New Mexico. (DOES NOT AFFECT SUBJECT PARCEL)
26. Easement, and incidental purposes thereto, granted to Public Service Company of New Mexico, a New Mexico Corporation, and The Mountain States Telephone and Telegraph Company, a Colorado Corporation, recorded December 20, 1972, in Book Misc. 290, Page 665, as Doc. No. 25937, records of Bernalillo County, New Mexico. (DOES NOT AFFECT SUBJECT PARCEL)
27. Easement, and incidental purposes thereto, granted to Public Service Company of New Mexico, a New Mexico Corporation, recorded February 12, 1960, in Book D-527, Page 23, as Doc. No. 57021, records of Bernalillo County, New Mexico. (DOES NOT AFFECT SUBJECT PARCEL)
28. Easement, and incidental purposes thereto, granted to Public Service Company of New Mexico, a New Mexico Corporation, and The Mountain States Telephone and Telegraph Company, a Colorado Corporation, recorded May 26, 1967, in Book Misc. 69, Page 137, as Doc. No. 51041, and as shown as a five foot (5') Easement, and incidental purposes thereto, reserved along the westerly lot line of the insured premises, as shown on the recorded plat, recorded in Plat Book C15, Page 149, records of Bernalillo County, New Mexico. records of Bernalillo County, New Mexico. (DOES NOT AFFECT SUBJECT PARCEL)
29. Easement, and incidental purposes thereto, granted to Public Service Company of New Mexico, a New Mexico Corporation, and The Mountain States Telephone and Telegraph Company, a Colorado Corporation, recorded June 5, 1967, in Book Misc. 69, Page 845, as Doc. No. 51835, records of Bernalillo County, New Mexico. (DOES NOT AFFECT SUBJECT PARCEL)
30. Right of Way Easement recorded March 16, 1971, in Book Misc. 208, Page 73, as Doc. No. 16473, records of Bernalillo County, New Mexico. (DOESN NOT AFFECT SUBJECT PARCEL)
31. Right of Way Easement recorded March 16, 1971, in Book Misc. 208, Page 75, as Doc. No. 16474, records of Bernalillo County, New Mexico. (DOES NOT AFFECT SUBJECT PARCEL)
32. Reservation of permanent easement as set forth in the Judgment recorded March 25, 1971, in Book Misc. 209, Page 7, as Doc. No. 17854, Modification of Easement recorded July 12, 2005, in Book A99, page 9497, as Doc. No. 2005099801, records of Bernalillo County, New Mexico. (AS SHOWN HEREIN - ADJOINS THE SUBJECT PARCEL AND PARTLY WITHIN SUBJECT PARCEL)
33. Easement, and incidental purposes thereto, granted to the City of Albuquerque, a New Mexico municipal corporation, recorded September 9, 2002, in Book A41, Page 3540, as Doc. No.2002113867, and re-recorded September 11, 2002, in Book A41, Page 4648, as Doc. No.2002114976, records of Bernalillo County, New Mexico. (DOES NOT AFFECT SUBJECT PARCEL)
34. Declaration of Private Access Easement by and between Regents of the University of New Mexico and Sandia Foundation, a New Mexico not for profit corporation, recorded June 19, 2007, as Doc. No.2007089323, records of Bernalillo County, New Mexico. (DOES NOT AFFECT SUBJECT PARCEL)
35. Easement, and incidental purposes thereto, granted to the City of Albuquerque, a New Mexico municipal corporation, recorded September 27, 2004, in Book A84, Page 5559, as Doc. No. 2004135936, records of Bernalillo County, New Mexico. (DOES NOT AFFECT SUBJECT PARCEL)
36. Easements, and incidental purposes thereto, affecting the insured premises, as shown on the recorded plat, recorded in Plat Book 2007C, Page 166, as Doc. No. 2007089423, records of Bernalillo County, New Mexico. (DOES NOT AFFECT SUBJECT PARCEL)
37. Agreement to Construct Subdivision Improvements by and between the City of Albuquerque and Regents of the University of New Mexico recorded September 27, 2004, in Book A84, Page 5557, as Doc. No. 2004135934, records of Bernalillo County, New Mexico, and any amendments and extensions thereto. (DOES NOT AFFECT SUBJECT PARCEL)
38. Grant of Easement by and between Albuquerque Metropolitan Arroyo Flood Control Authority and Regents of the University of New Mexico, dated June 6, 2005, recorded July 12, 2005, in Book A99, Page 9498, as Doc. No. 2005099802, records of Bernalillo County, New Mexico. (AS SHOWN HEREIN SEE EXCEPTION 32)
39. Grant of Easements for Utility Lines by and between the Board of County Commissioners of the County of Bernalillo and Regents of the University of New Mexico, recorded July 16, 2004, in Book A80, Page 9614, as Doc. No. 2004099873, records of Bernalillo County, New Mexico. (DOES NOT AFFECT SUBJECT PARCEL)
40. Permanent Easement by and between Regents of the University of New Mexico and Albuquerque Bernalillo County Water Utility Authority, recorded August 4, 2008, as Doc. No. 2008087801, records of Bernalillo County, New Mexico. (DOES NOT AFFECT SUBJECT PARCEL)
41. University of New Mexico Notice of Federal Interest recorded August 31, 2011, as Doc. No. 2011078949, records of Bernalillo County, New Mexico. (DOES NOT AFFECT SUBJECT PARCEL)
42. University of New Mexico Notice of Federal Interest recorded October 6, 2011, as Doc. No. 2011090352, records of Bernalillo County, New Mexico. (DOES NOT AFFECT SUBJECT PARCEL)
43. Easement, and incidental purposes thereto, granted to the City of Albuquerque, a New Mexico municipal corporation, recorded December 21, 2004, in Book A88, Page 7410, as Doc. No. 2004177899, records of Bernalillo County, New Mexico. (DOES NOT AFFECT SUBJECT PARCEL)
44. Grant of Easement by and between Comcast of New Mexico, Inc. and Regents of the University of New Mexico, dated November 3, 2010, recorded February 8, 2011, as Doc. No. 2011013970, records of Bernalillo County, New Mexico. (DOES NOT AFFECT SUBJECT PARCEL)
45. Permanent Easement by and between Regents of the University of New Mexico and the Albuquerque Bernalillo County Water Utility Authority, recorded April 28, 2009, as Doc. No. 2009045430, records of Bernalillo County, New Mexico. (DOES NOT AFFECT SUBJECT PARCEL)
46. Easement Encroachment Agreement, by and between Public Service

SCHEDULE B II TITLE EXCEPTIONS (CONT'D)

Company of New Mexico, a New Mexico Corporation and Regents of the University of New Mexico, recorded May 8, 2015, as Doc. No. 2015038768, records of Bernalillo County, New Mexico. (DOES NOT AFFECT SUBJECT PARCEL)

47. Underground Easement, and incidental purposes thereto, granted to Public Service Company of New Mexico, a New Mexico Corporation, recorded October 26, 2009, as Doc. No. 2009118477, records of Bernalillo County, New Mexico. (DOES NOT AFFECT SUBJECT PARCEL)
48. Regulatory Agreement by and between Regents of the University of New Mexico and Secretary of Housing and Urban Development, recorded November 17, 2004, in Book A86, Page 9875, as Doc. No. 2004160320, records of Bernalillo County, New Mexico. (THESE ARE ALTA PARCELS FROM BHI 2008)
49. Closing Document Amendment by and between Regents of the University of New Mexico; Wells Fargo Bank, National Association and U.S. Department of Housing and Urban Development, recorded March 29, 2005, in Book A94, Page 2171, as Doc. No. 2005042306, records of Bernalillo County, New Mexico. (AFFECTS - OVERLAP OF AREA OF ENCUMBERANCE)
50. Terms, provisions, conditions, restrictions and stipulations contained in that certain Ground Lease dated December 20, 1988, by and between the County of Bernalillo, as Landlord, and Regents of the University of New Mexico, as Tenant, recorded April 3, 1989, in Book Misc. 731A, Page 725, as Doc. No. 1989027626; Second Supplemental Lease Agreement recorded April 3, 1989, in Book Misc. 731A, Page 759, as Doc. No. 1989027654 and Fourth Supplemental Lease Agreement recorded April 3, 1989, in Book Misc. 731A, Page 765, as Doc. No. 1989027655, records of Bernalillo County, New Mexico. (DOES NOT AFFECT SUBJECT PARCEL)
51. Terms, provisions, conditions, restrictions and stipulations contained in that certain Lease Agreement for Operation and Lease of County Healthcare Facilities by and between the Board of County Commissioners of the County of Bernalillo, and Regents of the University of New Mexico, recorded November 17, 2004, in Book A86, Page 9871, as Doc. No. 2004160316, and First Amendment recorded November 17, 2004, in Book A86, Page 9873, as Doc. No. 2004160318, records of Bernalillo County, New Mexico. (DOES NOT AFFECT SUBJECT PARCEL)
52. Any possible assessments for paving, sewer and water extension which are or might be a lien by law, but have not yet been filed for record in the office of the County Clerk of Bernalillo County, New Mexico. (NOT PLOTTABLE)
53. Any consequences and/or disputes arising as to property described in Schedule "A", herein not being assessed as it is being conveyed. (NOT PLOTTABLE)
54. Rights of parties under any unrecorded Rental and/or Lease Agreements. (NOT PLOTTABLE)

LEGAL DESCRIPTIONS

PORTION OF THE SOUTHWEST 1/4 OF SECTION 15, T.10N., R.3E., UNPLATTED LANDS OF UNM

A CERTAIN TRACT OF LAND BEING A PORTION OF THE SOUTHWEST ONE-QUARTER OF SECTION 15, TOWNSHIP 10 NORTH, RANGE 3 EAST, NEW MEXICO PRINCIPAL MERIDIAN, CITY OF ALBUQUERQUE, BERNALILLO COUNTY NEW MEXICO, BEING MORE PARTICULARLY DESCRIBED BY NEW MEXICO STATE PLANE GRID BEARINGS (NAD83 CENTRAL ZONE) AND GROUND DISTANCES AS FOLLOWS:

COMMENCING AT A FOUND 1.25" PLASTIC CAP STAMPED "NEW MEXICO PS 11184" WHENCE A FOUND 1.25" PLASTIC CAP STAMPED "NEW MEXICO PS 11184" BEARS NORTH 00°40'52"EAST A DISTANCE OF 1321.51 FEET;

THENCE AS A TIE SOUTH 11°39'39" EAST A DISTANCE OF 457.78 FEET TO THE POINT OF BEGINNING, SAID POINT ALSO BEING THE NORTHWESTERLY CORNER OF THE TRACT HEREIN DESCRIBED, AND ALSO BEING A POINT ON THE SOUTHERLY BOUNDARY OF THE NORTH DIVERSION CHANNEL;

THENCE ALONG THE NORTHERLY BOUNDARY OF THE TRACT HEREIN DESCRIBED AND SAID SOUTHERLY BOUNDARY OF THE NORTH DIVERSION CHANNEL, ALONG THE ARC OF A NON-TANGENT CURVE TO THE LEFT HAVING A CENTRAL ANGLE OF 07°02'50", A RADIUS OF 1186.10 FEET, A CHORD BEARING SOUTH 60°48'36" EAST A DISTANCE OF 145.79 FEET AND AN ARC DISTANCE OF 145.89 FEET TO A POINT OF COMPOUND CURVATURE;

THENCE ALONG THE ARC OF A NON-TANGENT CURVE TO THE LEFT HAVING A CENTRAL ANGLE OF 03°15'00", A RADIUS OF 2331.99 FEET, A CHORD BEARING SOUTH 66°30'01" EAST A DISTANCE OF 132.26 FEET AND AN ARC DISTANCE OF 132.28 FEET TO A POINT OF TANGENCY;

THENCE SOUTH 67°35'01" EAST A DISTANCE OF 446.16 FEET TO THE NORTHEASTERLY CORNER OF THE TRACT HEREIN DESCRIBED, SAID POINT ALSO BEING A POINT ON THE NORTHERLY BOUNDARY OF A PORTION OF PARCEL B-3;

THENCE ALONG THE EASTERLY BOUNDARY OF THE TRACT HEREIN DESCRIBED AND THE WESTERLY BOUNDARY OF SAID PORTION OF PARCEL B-3, NORTH 90°00'00" WEST A DISTANCE OF 40.64 FEET TO AN ANGLE POINT;

THENCE SOUTH 00°00' WEST A DISTANCE OF 280.54 FEET TO AN ANGLE POINT, SAID POINT ALSO BEING THE SOUTHWESTERLY CORNER OF SAID PORTION OF PARCEL B-3;

THENCE NORTH 90°00'00" WEST A DISTANCE OF 72.95 FEET TO AN ANGLE POINT;

THENCE SOUTH 21°40'49" EAST A DISTANCE OF 36.34 FEET TO AN ANGLE POINT;

THENCE SOUTH 00°00'00" EAST A DISTANCE OF 75.47 FEET TO THE SOUTHEASTERLY CORNER OF THE TRACT HEREIN DESCRIBED, SAID POINT ALSO BEING A POINT ON THE NORTHERLY RIGHT OF WAY LINE OF LOMAS BOULEVARD;

THENCE ALONG SAID NORTHERLY RIGHT OF WAY LINE OF LOMAS BOULEVARD, ALONG THE ARC OF A TANGENT CURVE TO THE RIGHT HAVING A CENTRAL ANGLE OF 03°40'48", A RADIUS OF 1223.33 FEET, A CHORD BEARING NORTH 62°04'40" WEST A DISTANCE OF 78.56 FEET AND AN ARC DISTANCE OF 78.57 FEET TO A POINT OF TANGENCY;

THENCE NORTH 60°14'16" WEST A DISTANCE OF 631.37 FEET TO THE SOUTHWESTERLY CORNER OF THE TRACT HEREIN DESCRIBED;

THENCE ALONG THE ARC OF A NON-TANGENT CURVE TO THE RIGHT HAVING A CENTRAL ANGLE OF 29°31'49", A RADIUS OF 35.00 FEET, A CHORD BEARING NORTH 14°30'39" WEST A DISTANCE OF 17.84 FEET AND AN ARC DISTANCE OF 18.04 FEET TO A POINT;

THENCE NORTH 00°11'58" EAST A DISTANCE OF 32.91 FEET TO A POINT OF CURVATURE;

THENCE ALONG THE ARC OF A TANGENT CURVE TO THE RIGHT HAVING A CENTRAL ANGLE OF 13°36'47", A RADIUS OF 299.40 FEET, A CHORD BEARING NORTH 07°00'22" EAST A DISTANCE OF 70.97 FEET AND AN ARC DISTANCE OF 71.14 FEET TO A POINT OF TANGENCY;

THENCE NORTH 13°48'45" EAST A DISTANCE OF 219.28 FEET TO THE POINT OF BEGINNING.

SAID TRACT CONTAINS ±5.7815 AC.

LEGAL DESCRIPTIONS

A PORTION OF PARCEL B-3

A CERTAIN TRACT OF LAND BEING A PORTION PARCEL B-3 AS SHOWN OF ALTA/ACSM LAND TITLE SURVEY, UNIVERSITY OF NEW MEXICO HOSPITAL, ALBUQUERQUE, NEW MEXICO, JUNE, 2008, FHA PROJECT NO. 116-13002, BY BOHANNAN HUSTON DATED JUNE 19, 2008 AND BEING MORE PARTICULARLY DESCRIBED BY NEW MEXICO STATE PLANE GRID BEARINGS (NAD83 CENTRAL ZONE) AND GROUND DISTANCES AS FOLLOWS:

COMMENCING AT A FOUND 1.25" PLASTIC CAP STAMPED "NEW MEXICO PS 11184" WHENCE A FOUND 1.25" PLASTIC CAP STAMPED "NEW MEXICO PS 11184" BEARS NORTH 00°40'52" EAST A DISTANCE OF 1321.51 FEET;

THENCE AS A TIE SOUTH 45°25'48" EAST A DISTANCE OF 1057.75 FEET TO THE POINT OF BEGINNING, SAID POINT BEING A POINT ON THE NORTHERLY BOUNDARY OF THE TRACT HEREIN DESCRIBED, SAID POINT ALSO BEING A POINT ON THE SOUTHERLY BOUNDARY OF THE NORTH DIVERSION CHANNEL;

THENCE ALONG THE NORTHERLY BOUNDARY OF THE TRACT HEREIN DESCRIBED, NORTH 90°00'00" EAST A DISTANCE OF 30.95 FEET TO A POINT OF CURVATURE,

THENCE ALONG THE ARC OF A CURVE TO THE RIGHT HAVING A CENTRAL ANGLE OF 46°18'25", A RADIUS OF 82.13 FEET, A CHORD BEARING SOUTH 66°50'58" EAST A DISTANCE OF 64.59 FEET AND AN ARC DISTANCE OF 66.38 FEET TO THE NORTHEASTERLY CORNER OF THE TRACT HEREIN DESCRIBED;

THENCE SOUTH 00°00'00" EAST A DISTANCE OF 255.15 FEET TO THE SOUTHEASTERLY CORNER OF THE TRACT HEREIN DESCRIBED;

THENCE NORTH 90°00'00" WEST A DISTANCE OF 130.98 FEET TO THE SOUTHWESTERLY CORNER OF THE TRACT HEREIN DESCRIBED, SAID POINT ALSO BEING A POINT ON THE EASTERLY BOUNDARY OF A PORTION OF UNPLATTED LANDS WITHIN THE SOUTHWEST ONE-QUARTER OF SECTION 15, TOWNSHIP 10 NORTH, RANGE 3 EAST N.M.P.M.;

THENCE NORTH 00°00'00" EAST A DISTANCE OF 280.54 FEET TO THE NORTHWESTERLY CORNER OF THE TRACT HEREIN DESCRIBED;

THENCE NORTH 90°00'00" EAST A DISTANCE OF 40.64 FEET TO THE POINT OF BEGINNING.

SAID TRACT CONTAINS ±0.8329 AC.

ALTA/NSPS LAND TITLE SURVEY

HUD - U.N.M. HOSPITAL PORTION OF SW 1/4

SECTION 15
TOWNSHIP 10 N, RANGE 3 E
CITY OF ALBUQUERQUE
BERNALILLO COUNTY, NEW MEXICO
OCTOBER 2020

FHA PROJECT NO. 116-13002
FHA PROJECT NO._____

BARRY S. PHILLIPS
NEW MEXICO
15
LICENSED PROFESSIONAL SURVEYOR
DRAFT

SHEET 2 OF 3

Bohannan Huston
www.bhinc.com 800.877.5332

Tue, 19-Jan-2021 - 4:11:pm, Plotted by: RGAUNA
P:\20190398\SURVEY\02_OFFICE\01_ALTA\20190398_PLAT2.dwg

ALTA/NSPS LAND TITLE SURVEY

HUD - U.N.M. HOSPITAL

PORTION OF SW 1/4

SECTION 15
TOWNSHIP 10 N, RANGE 3 E
CITY OF ALBUQUERQUE
BERNALILLO COUNTY, NEW MEXICO
OCTOBER 2020

FHA PROJECT NO. 116-13002
FHA PROJECT NO._____

EASEMENTS AND TOPO

N

40 20 0 40
1"=40'

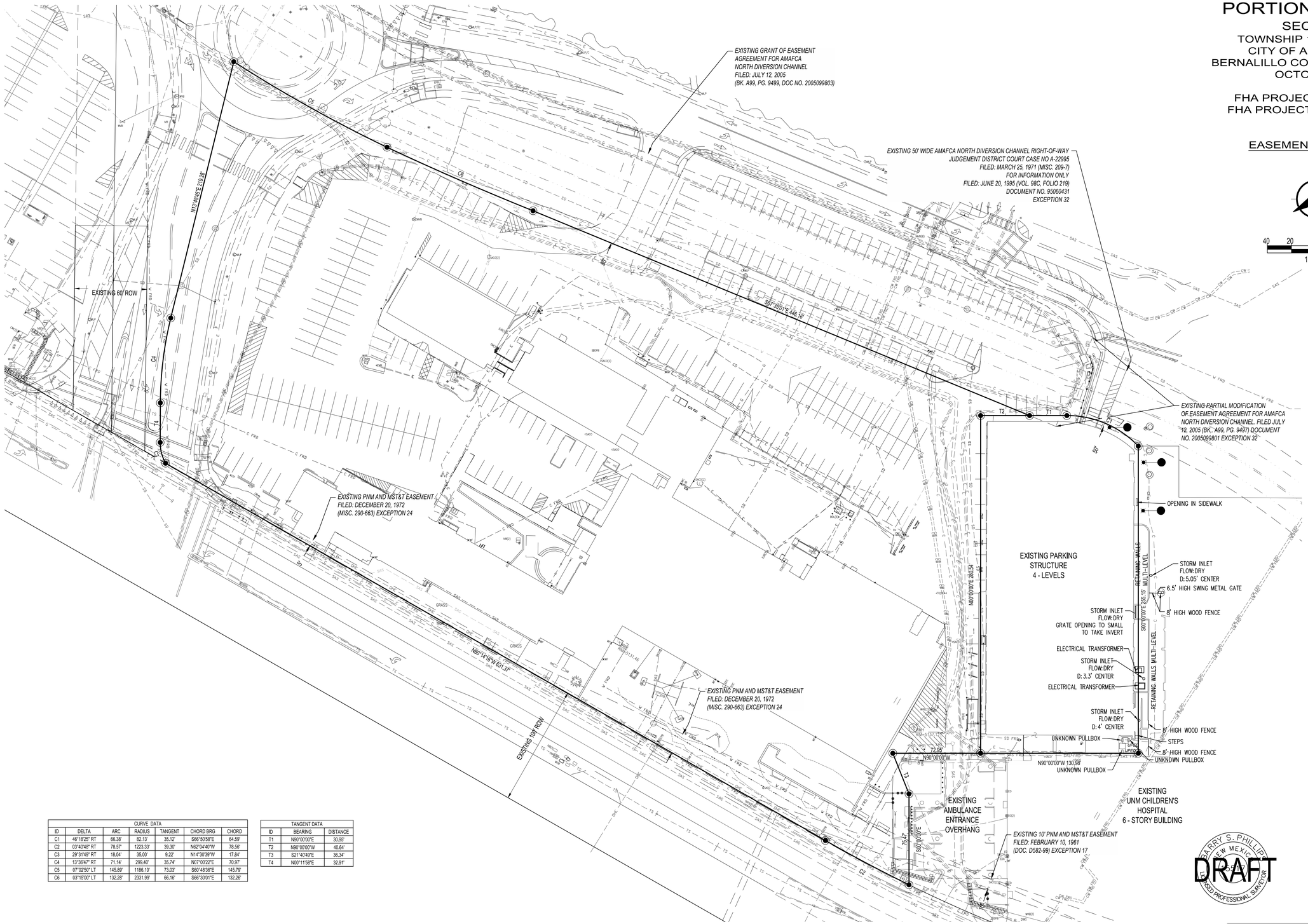

CURVE DATA						
ID	DELTA	ARC	RADIUS	TANGENT	CHORD BRG	CHORD
C1	46°18'25" RT	66.38'	82.13'	35.12'	S66°50'58"E	64.59'
C2	03°40'48" RT	78.57'	1223.33'	39.30'	N62°04'40"W	78.56'
C3	29°31'49" RT	18.04'	35.00'	9.22'	N14°30'39"W	17.84'
C4	13°36'47" RT	71.14'	299.40'	35.74'	N07°00'22"E	70.97'
C5	07°02'50" LT	145.89'	1186.10'	73.03'	S60°48'36"E	145.79'
C6	03°15'00" LT	132.28'	2331.99'	66.16'	S66°30'01"E	132.26'

TANGENT DATA		
ID	BEARING	DISTANCE
T1	N90°00'00"E	30.95'
T2	N90°00'00"W	40.64'
T3	S21°40'49"E	36.34'
T4	N00°11'58"E	32.91'

SHEET 3 OF 3

Bohannan Huston
www.bhinc.com 800.877.5332

Tue, 19-Jan-2021 - 4:11 pm, Plotted by: RGAUNA
P:\20190398\SURVEY\02_OFFICE\01_ALTA\20190398_PLAT3.dwg

Go to previous versions of this Section

2021 New Mexico Statutes
Chapter 3 - Municipalities
Article 21 - Zoning Regulations
Section 3-21-1 - Zoning; authority of county or municipality.

Universal Citation: NM Stat § 3-21-1 (2021)

A. For the purpose of promoting health, safety, morals or the general welfare, a county or municipality is a zoning authority and may regulate and restrict within its jurisdiction the:

(1) height, number of stories and size of buildings and other structures;

(2) percentage of a lot that may be occupied;

(3) size of yards, courts and other open space;

(4) density of population; and

(5) location and use of buildings, structures and land for trade, industry, residence or other purposes.

B. The county or municipal zoning authority may:

(1) divide the territory under its jurisdiction into districts of such number, shape, area and form as is necessary to carry out the purposes of Sections 3-21-1 through 3-21-14 NMSA 1978; and

to a limited number of parties does not mean that the zoning action is necessarily quasi-judicial in nature. The fact that a particular party's proposed development or a particular parcel is in the mind of the zoning authority when it takes action does not change the nature of the zoning authority's decision from legislative to quasi-judicial. *Albuquerque Commons P'ship v. Albuquerque City Council*, 2006-NMCA-143, 140 N.M. 751, 149 P.3d 67, *rev'd*, 2008-NMSC-025, 144 N.M. 99, 184 P.3d 411.

The uniformity requirement does not prohibit different classifications within a district so long as they are reasonable and based on the public policy to be served. *Albuquerque Commons P'ship v. Albuquerque City Council*, 2006-NMCA-143, 140 N.M. 751, 149 P.3d 67, *rev'd*, 2008-NMSC-025, 144 N.M. 99, 184 P.3d 411.

When a zoning resolution is in substance an ordinance or a permanent regulation, the name given to the resolution is immaterial, and if it is passed with all the formality of an ordinance, the resolution thereby becomes a legislative act. *Albuquerque Commons P'ship v. Albuquerque City Council*, 2006-NMCA-143, 140 N.M. 751, 149 P.3d 67, *rev'd*, 2008-NMSC-025, 144 N.M. 99, 184 P.3d 411.

Comprehensive scheme to regulate land. — The Zoning Act affords counties a comprehensive scheme to regulate land use as a way to protect public health, safety and welfare. *Cerrillos Gravel Products, Inc. v. Santa Fe Bd. of Cnty. Comm'rs*, 2005-NMSC-023, 138 N.M. 126, 117 P.3d 932.

Definition of zoning. — Zoning is defined as governmental regulation of the uses of land and buildings according to districts or zones. When used to promote the public interest, it is justified and has been upheld as a legitimate exercise of the police power. New Mexico has specifically approved its use to protect and promote the safety, health, morals and general welfare. *Miller v. City of Albuquerque*, 1976-NMSC-052, 89 N.M. 503, 554 P.2d 665.

County's authority to promulgate zoning ordinances must come from enabling legislation from the state legislature, and therefore, any exercise of power under a zoning ordinance must be authorized by statute. *Burroughs v. Board of Cnty. Comm'rs*, 1975-NMSC-051, 88 N.M. 303, 540 P.2d 233.

As municipality has no zoning authority beyond that provided by this article. *Mechem v. City of Santa Fe*, 1981-NMSC-104, 96 N.M. 668, 634 P.2d 690; *City of Santa Fe v. Armijo*, 1981-NMSC-102, 96 N.M. 663, 634 P.2d 685.

751, 149 P.3d 67, *rev'd*, 2008-NMSC-025, 144 N.M. 99, 184 P.3d 411.

IV. DOWN ZONING.

Downzoning defined. — The characteristic common to all downzoning actions is that they focus on specific properties or small groups of properties within an otherwise similarly situated class, restricting or allowing uses in ways that do not apply to the surrounding area or similar areas within a municipality. *Albuquerque Commons v. Albuquerque City Council*, 2008-NMSC-025, 144 N.M. 99, 184 P.3d 411, *rev'g*, 2006-NMCA-143, 140 N.M. 751, 149 P.3d 67.

Common characteristic of downzoning. — Where the city council adopted a text amendment to a sector plan as a legislative action to create a new sub-zone within the sector plan area, which consisted of three parcels comprising six percent of the sector plan area and to impose additional, significantly more restrictive regulations that were applicable only to the new sub-zone, the amendment was a downzoing of property in the new sub-zone and a quasi-judicial action that denied the property owners in the sub-zone due process of law. *Albuquerque Commons v. Albuquerque City Council*, 2008-NMSC-025, 144 N.M. 99, 184 P.3d 411, *rev'g*, 2006-NMCA-143, 140 N.M. 751, 149 P.3d 67.

No down-zoning. — Where zoning text amendments were consistent with city's master plan, quantified and made more specific the city's policy vision to assure development of an urban center as stated in its comprehensive plan and in the prior zoning provisions and delineated how that vision would specifically come to pass in future development, and the changes applied to all property owners within the district, the zoning text amendments did not constitute a down-zoning and were legislative in nature. *Albuquerque Commons P'ship v. Albuquerque City Council*, 2006-NMCA-143, 140 N.M. 751, 149 P.3d 67, *rev'd*, 2008-NMSC-025, 144 N.M. 99, 184 P.3d 411.

V. STATE AND FEDERAL IMMUNITY.

Immunity of state. — The state is immune from any municipal zoning regulations. *City of Albuquerque v. Jackson Bros. Inc.*, 1991-NMCA-140, 113 N.M. 149, 823 P.2d 949.

Test to determine whether one political subdivision of the state is immune from the zoning laws of a co-equal political subdivision of the state. — In zoning and land use disputes between co-equal political subdivisions of the state, the statutory guidance test applies to determine whether a land use proposed by one political subdivision of the state may be prohibited by the zoning regulation of another. Under the statutory guidance test, courts review the statutory powers assigned to each entity to ascertain

whether the legislature intended that one entity's local zoning ordinances apply to the other entity's activities. *Village of Logan v. Eastern N.M. Water Util. Auth.*, 2015-NMCA-103.

In zoning and land use dispute between a municipality and a water utility authority, both of which are political subdivisions of the state established by legislative processes, the legislative purpose behind the creation of the water utility authority would be frustrated by requiring it to adhere to municipal zoning ordinances, and therefore the statutory guidance test applies to immunize the water utility authority from the municipality's zoning ordinances. *Village of Logan v. Eastern N.M. Water Util. Auth.*, 2015-NMCA-103.

State governmental body is not subject to local zoning regulations or restrictions. *City of Santa Fe v. Armijo*, 1981-NMSC-102, 96 N.M. 663, 634 P.2d 685.

County may not regulate a private entity on state land operating with the state's approval. *County of Santa Fe v. Milagro Wireless, LLC*, 2001-NMCA-070, 130 N.M. 771, 32 P.3d 214.

VI. DUE PROCESS AND TAKING ISSUES.

State-created substantive property right. — Where a municipality downzoned the landowner's property by map amendment; state case law required the municipality to establish a mistake in the original zoning or subsequent changed conditions in the neighborhood before the zoning could be legally changed; and a municipal resolution required the municipality to demonstrate that a mistake had occurred in the original zoning, that changed neighborhood or community conditions justify the change, or that a different use category is more advantageous to the community before a zoning classification could be changed by map amendment, the property owner had a state-created property right to continued zoning classification of the landowner's property unless the municipality justified the zoning change in accordance with the criteria of state case law and the municipal resolution. *Albuquerque Commons P'ship v. Albuquerque City Council*, 2009-NMCA-065, 146 N.M. 568, 212 P.3d 1122, cert. granted, 2009-NMCERT-007, 147 N.M. 363, 223 P.3d 360 and cert. denied, 1305 S.Ct. 1501, 176 L.Ed. 2d 110 (2010).

Property deprivation or due process violation. — Where state case law and a municipal resolution required the municipality to establish the substantive criteria of change, mistake or a more advantageous use category before changing the zoning classification of property, the failure of the municipality to actually establish one of the substantive criteria does not lead to a property deprivation or due process violation, the deprivation or violation only arises in the event the landowner is denied notice or a